SIEMENS

SIMOVERT MV
Medium-voltage converters

Commissioning Instructions Edition 02.00

with HV-IGBT and IHV filter

Order No. 6SE8004-0BH76

The reproduction, transmission or use of this document or its contents is not permitted without express written authority.
Offenders will be liable for damages. All rights, including rights created by patent grant or registration or a utility model or design, are reserved.

Exclusion of Liability
We have checked the contents of this Manual to ensure that they coincide with the described hardware and software. However, deviations cannot be completely ruled-out, so we cannot guarantee complete conformance. However, the information in this document is regularly checked and the necessary corrections included in subsequent editions. We are thankful for any recommendations or suggestions.

© Siemens AG 2000 All rights reserved

We reserve the right to make technical changes

Order No.: 6SE8004-0BH76
Order to A&D LD S1
Printed in the Federal Republic of Germany

Contents

1 Transport, storage and installation 10

1.1 Transport 10

1.2 Storage 11

1.3 Installation 12

2 Connecting-up 13

2.1 EMC information 13
2.1.1 Introduction to EMC 13
2.1.2 Application and operation 14

2.2 Connecting the power circuit 17

2.3 Control cable connections 18
2.3.1 Possibilities of connecting-up the control terminal strip -X100 18
2.3.2 Automation interface 24

3 Selected functions 25

3.1 Protective functions 25
3.1.1 Safety shutdown 25
3.1.2 Insulation monitoring 28

3.2 Open-loop control functions 36

3.3 Actual value sensing 45

4 Start-up 46

4.1 Recommended equipment for start-up 48

4.2 Start-up steps 49
4.2.1 Configuration word 49
4.2.2 Checking the protective functions 49
4.2.3 Safety circuit 50
4.2.4 Fault shutdown 50
4.2.5 Parameterization of the ON/OFF 1 command 51
4.2.6 Parameterizing the inverter enable 52
4.2.7 Changeover, remote/local control 52

4.2.8 Parameterizing the circuit-breaker ... 53
4.2.9 Testing the pre-charging via the pre-charging circuit ... 54
4.2.10 Testing the inverter without DC link voltage (simulation mode) ... 55
4.2.10.1 Preparatory measures ... 55
4.2.10.2 Simulation mode ... 55
4.2.10.3 Handling the setpoint generator block SWG in function package TRV ... 56
4.2.11 Testing pre-charging with the main supply connected ... 57
4.2.12 Testing the inverter without connected load at the rated DC link voltage ... 57

4.3 Parameterizing the Transvektor closed-loop control ... 58
4.3.1 Determining the parameter data ... 58
4.3.2 Changing over to setpoint generator operation ... 62
4.3.3 Checking the actual values ... 62
4.3.4 Checking the angular offset ... 63
4.3.5 Checking the speed sensing (operation with encoder) ... 63
4.3.6 Checking the closed-loop control settings (ASM) ... 64
4.3.7 Operation without speed encoder ... 66
4.3.8 Operating the drive converter under load ... 67
4.3.8.1 Adapting the torque limits ... 67
4.3.8.2 Adapting the ramp-up- and ramp-down times ... 68
4.3.8.3 Setting the fast stop ramp ... 68
4.3.8.4 Setting the maximum and minimum speed ... 68
4.3.8.5 Speed controller setting ... 68
4.3.8.6 Setting the closed-loop current control and switching frequency ... 69
4.3.8.7 Checking the motor flux and -voltage ... 69

4.4 Overview of the software ... 69
4.4.1 FP-IO ... 69
4.4.2 FP-KOM1 ... 71
4.4.3 FP-GRS ... 74
4.4.4 FP-EAL1 ... 74
4.4.5 FP-ULS ... 74
4.4.6 FP-SWK ... 74
4.4.7 FP-NRV1 ... 82
4.4.8 FP-WRS ... 86
4.4.9 FP-BUB ... 86
4.4.10 FP-TRC ... 86
4.4.11 FP-TRV ... 86
4.4.12 FP-STV ... 87
4.4.13 FP-RAN ... 87
4.4.14 FP-@SEND1 ... 87
4.4.15 FP-@SEND2 ... 87
4.4.16 FP-@EMPF1 ... 87

5 Operation 88

5.1 Operator control elements and door-mounted instruments 88

5.2 Operator control panel OP2 89
5.2.1 Language changeover 89
5.2.2 Parameterization for the USS interface 90
5.2.3 Commands to the drive converter (binary value processing) 91
5.2.4 Setpoint inputs 92
5.2.5 Actual value displays 94
5.2.6 Message system processing 95
5.2.7 Status displays 98

5.3 Power-on and power-off sequences 105
5.3.1 Power-on sequence 105
5.3.2 Power-off sequence 107

Note

- The information in this Manual does not purport to cover all details or variations in equipment, nor to provide for every possible contingency to be met in connection with installation, operation or maintenance.
- Should further information be desired or should particular problems arise which are not covered sufficiently for the purchaser's purposes, please contact your local Siemens office.
- Further, the contents of this Manual shall neither become a part of nor modify any prior or existing agreement, commitment or relationship. The sales contract contains the entire obligation of Siemens. The warranty contained in the contract between the parties is the sole warranty of Siemens. Any statements contained herein do not create new warranties nor modify the existing warranty.

Definitions, warning information

Qualified personnel

For the purpose of this Instruction Manual and product labels, a "Qualified person" is someone who is familiar with the installation, mounting, start-up and operation of the equipment and the hazards involved.
He or she must have the following qualifications:

1. Trained and authorized to energize, de-energize, clear, ground and tag circuits and equipment in accordance with established safety procedures.
2. Trained in the proper care and use of protective equipment in accordance with established safety procedures.
3. Trained in rendering first aid.

Danger

For the purpose of this Instruction Manual and product labels, "Danger" indicates death, severe personal injury and/or substantial property damage will result if proper precautions are not taken.

Warning

For the purpose of this Instruction Manual and product labels, "Warning" indicates death, severe personal injury or property damage can result if proper precautions are not taken.

Caution

For the purpose of this Instruction Manual and product labels, "Caution" indicates that minor personal injury or material damage can result if proper precautions are not taken.

Note

For the purpose of this Instruction Manual, "Note" indicates information about the product or the respective part of the Instruction Manual which is essential to highlight.

Warning

Electrical equipment contains components which are at dangerous voltage levels.

If these instructions are not strictly adhered to, this can result in severe bodily injury and material damage.

Only appropriately qualified personnel may work on this equipment or in its vicinity.

This personnel must be completely knowledgeable about all the warnings and service measures according to this Instruction Manual.

The successful and safe operation of this equipment is dependent on proper handling, installation, operation and maintenance.

Electrostatically sensitive devices (ESD)

Caution

Electronic modules contain electrostatically sensitive devices that can easily be destroyed if they are incorrectly handled. However, if your work does involve the handling of such devices, please observe the following information:

- Electronics modules should not be touched unless work has to be carried-out on them.
- If it is essential for you to touch an electronic module, make sure that your body is electrostatically discharged beforehand.
- Modules may not be allowed to come into contact with electrically insulating materials such as plastic foil, insulating table tops or clothing made of synthetic fibers.
- Modules may only be placed on electrically conducting surfaces.
- Modules and electronic components should always be packed in electrically conducting containers (such as metallized plastic boxes or metal canisters) before being stored or shipped.
- If packing containers are used which are not conductive, modules and boards must first be wrapped in a conducting material. Examples of such materials include electrically conducting foam rubber or household aluminum foil.

For easy reference, the protective measures necessary when handling electrostatic sensitive devices are illustrated in the sketches below:

- a = Conductive flooring
- b = Anti-static table
- c = Anti-static footwear
- d = Anti-static overall
- e = Anti-static chain
- f = Grounding connections of cabinets

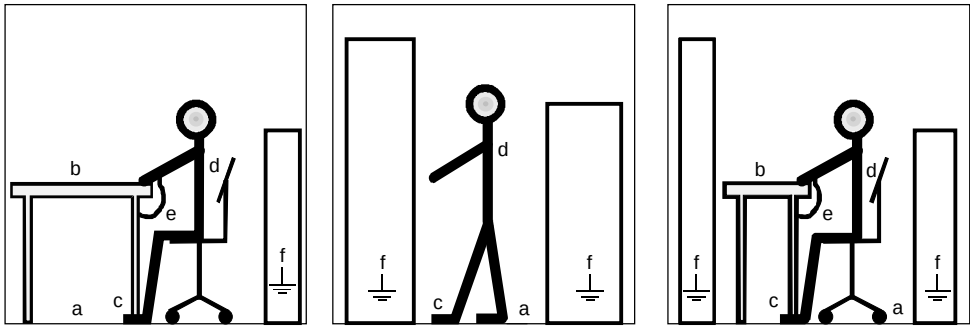

Safety- and application instructions for drive converters

Safety- and application instructions for drive converters

(acc. to: Low-Voltage Directive 73/23/EEC)

The SIMOVERT MV converters are medium-voltage converters. However, they include components which fall under the directive for low-voltage devices. These include auxiliary operations as well as open-loop and closed-loop control components.

1. General

During operation, drive converters can have live, bare, and also moving or rotating parts as well as hot surfaces, corresponding to their degree of protection.

Severe personal injury or material damage can occur if the required covers are inadmissibly removed, if the equipment is incorrectly used or is incorrectly installed and handled.

Additional information is provided in the documentation.

Only qualified specialist personnel may be employed to transport, install and start-up (commission) and service the equipment (observe IEC 364 and CENELEC HD 384 or DIN VDE 0100 and IEC Report 664 or DIN VDE 0110 and the domestic accident prevention regulations).

In the sense of basic safety information, qualified specialist personnel are those personnel who have the training knowhow and qualifications to install, mount, commission and operate the equipment

2. Correct use

Drive converters are components which are designed for installation in electrical systems or machines.

When installing/mounting in machines, it is not permissible to commission the drive converter (i.e. to start correct operation), until it has been identified that the machine corresponds to the regulations in the EEC Directive 89/392/EEC (Machinery Directive); EN 60204 must be observed.

Start-up (commissioning) (i.e. the start of correct operation) is only permitted, if the EMC Directive is fulfilled (89/336/EEC).

The drive converters fulfill the requirements of the low-voltage Directive 73/23/EEC. The harmonized Standards, series EN 50178/DIN VDE 0160 in conjunction with EN 60439-1/DIN VDE 0660 Part 500 and EN 60146/DIN VDE 0558 are applicable for drive converters.

The technical data as well as the information regarding the supply conditions (line supply), can be taken from the rating plate and the documentation. These conditions and specifications must be maintained.

3. Transport, storage

The instructions for transport, storage and correct handling must be observed.

Climatic conditions must be maintained corresponding to EN 50178.

4. Installation and mounting

The equipment must be installed/mounted and cooled corresponding to the specifications in the associated documentation.

The drive converters must be protected against inadmissible stressing. Especially during transport and handling, it is not permissible that components are bent and/or insulation clearances are changed. If at all possible, electronic components and contacts should not be touched.

Drive converters contain components and parts which can be destroyed by electrostatic discharge. They can be easily damaged if incorrectly handled. It is not permissible that electrical components are mechanically damaged or destroyed (under certain circumstances, this can represent a hazard to health!).

5. Electrical connection

When working with the drive converters when they are powered-up, all of the relevant domestic accident prevention regulations must be observed (e.g. VBG 4).

The electrical installation must be carried-out according to the relevant regulations (e.g. cable cross-sections, fuses, protective conductor connection). Information extending beyond this is included in the documentation.

Information for EMC-correct installation, such as screening, grounding, arrangement of filters and routing cables are provided in the documentation of the drive converter. This information must always be observed, also for drive converters with the CE Mark. It is the responsibility of the manufacturer of the system/plant or machine to ensure that the EMC legislation is observed.

6. Operation

Plants, in which drive converters are mounted or installed, must, if required, be equipped with additional monitoring- and protective devices in accordance with the valid safety regulations. For instance, legislation regarding equipment, accident prevention regulations etc.

After the drive converter has been isolated on the supply voltage, it is not permissible to immediately come into contact or touch equipment components and power connections which were live due to the fact the capacitors may still be charged. The appropriate warning labels on the drive converter must be observed.

All of the covers and doors must be kept closed during operation.

7. Service and maintenance

Observe the manufacturer’s documentation.

These safety instructions should be kept in a safe place!

1 Transport, storage and installation

1.1 Transport

Warning

The units are extremely heavy. Their center of gravity is offset so that they are in some cases heavier on the top.

The high weight of the equipment will always require the appropriate hoisting gear and trained personnel. The equipment may only be transported upright, in the position marked. It is not permissible that the equipment is tipped-over and transported in the horizontal position.

If the equipment is incorrectly hoisted and transported, this can result in serious bodily injury and even death and significant material damage.

The equipment is packed in the manufacturers plant corresponding to the stressing and climatic conditions during transport and in the country of destination.

The instructions on the packaging for transport, storage and professional handling must be observed.

The equipment is mounted on a wooden pallet so that it can be transported using fork lift trucks. When unpacked, it can be transported using the transport rails mounted on the drive converter. It must be ensured that the load is distributed evenly.

Significant vibrations during transport and hard jolts, for example, when setting down, should be avoided.

Transport damage

Carefully investigate the equipment before you accept the shipment from the transport company. Compare every item which you receive, with those items documented on the delivery note. You should immediately inform the transport company of every defect or damage. If you discover hidden defects or damage, immediately contact the transport company and request him to evaluate the equipment. If you don’t inform the transport company immediately, under certain circumstances, you may lose your claim for damage or defects. If required, you can request support from your local Siemens office.

Warning

If the equipment was damaged during transport, then it has been subject to an inadmissible stress level. Under certain circumstances, the electrical safety of the unit can no longer be guaranteed. It may not be connected unless it has been first subject to a high-voltage test.

If this is not observed, death, severe bodily injury or significant material damage could result.

What you do if the equipment was damaged during transport

1. If the equipment is damaged during transport:
   - The receiving party should play their role in reducing/limiting the damage
   - The damaged condition should be kept unchanged, until the shipping company or the transport insurer makes a decision
   - In this case, it must be ensured, that the regional damage commissioner for Siemens AG is involved as independent appraisal person. This has to be done for the following damage amounts:
     1 within Germany, for damage above DM 10,000.--
     2 outside Germany, for damage above DM 3,000.--
   - Enter the actual situation in the shipping papers and get the shipping/transport company to countersign
   - Generate a damage protocol, and send to the transport company and supplying company
   - Make the transport company liable in writing
2. The following damage must be reported to the police:
   - Damage due to theft
   - Damage due to fire
   - Damage due to accidents
3. Notification times for damage which wasn't immediately identified (the packaging must be opened to identify any possible damage:
   - Shipping companies: 6 days
   - Rail- or freight companies: 7 days

   For damage which is identified later, a damage report must be sent to the shipping company and the transport company.

4. Transport insurance:

   The equipment is insured ex-factory. The following situations are not insured:
   - When equipment is transported from one location to another after having been initially shipped
   - Transport within the company's facility (transport for instance, on the company's grounds, without using public streets and roads)

1.2 Storage

It is not permissible that the equipment is stored outdoors. It is not permissible to stack the units on top of one another! It must be ensured that the storage rooms are well ventilated and dry. Temperatures between –40 °C and +70 °C as well as temperature fluctuations < 0.5 K/min are permissible.

1.3 Installation

The equipment is installed after it has been unpacked and checked to see that the shipment is complete and not been damaged during transport.

Warning

Safe operation of the equipment assumes that it has been installed and commissioned professionally by qualified personnel taking into account the warning information in this Instruction Manual.

It is especially important, that the general and national installation- and safety regulations for working on power equipment are observed. This also includes the professional use of tools and the use of personnel protection devices and equipment in the appropriate regulations.

Death, severe bodily injury or significant material damage could result if these instructions are not observed.

Requirement profile of the mounting location

The units are suitable for mounting in enclosed electrical equipment rooms (EN 50178 / 1997, VDE 0160). They should be mounted in dry and dust-free rooms. The air drawn-in must be free of aggressive gases. If these specified conditions cannot be fulfilled, then the air drawn into the installation room must be cleaned using filters, or, for dust-laden air by using filter elements in front of the air mesh of the cabinet doors.

The ambient drive converter conditions in the equipment rooms may not exceed the values, specified in Class 3K3 acc. to IEC 721-3-3. The equipment must be de-rated (reduced output) for temperatures > 40 °C and installation altitudes > 1000 m.

The standard drive converters conform to degree of protection IP20 (air-cooled) or IP23 (water-cooled) acc. to DIN VDE 0470 and EN 60529.

The equipment is designed for floor mounting. Four holes for M12 bolts are provided in each cabinet element which are then used to retain them to the foundation.

In order to simplify mounting and installation or subsequent change of location, we recommend that a minimum clearance of 600 mm is kept to the wall.

The clearance between the top of the drive converter and the ceiling must be at least 650 mm due to the pressure equalization flaps.

The air to cool the power module is drawn-in through the cooling mesh in the cabinet doors, and the hot air is discharged upwards. Air can be drawn-in through the false floors, air ducts etc.

2 Connecting-up

Note

The circuit diagrams supplied with the equipment are binding for connecting-up the power-, control- and signal cables!

2.1 EMC information

2.1.1 Introduction to EMC

Electromagnetic compatibility (EMC) is the capability of a piece of electrical equipment to function fault and error free in a specified electromagnetic environment and without influencing that environment in an inadmissible fashion.

EMC thus represents the quality feature

- **Intrinsic noise immunity**: Immune to internal electrical noise
- **Immune to external noise**: Immune to electromagnetic noise outside the system
- **Noise emission level**: Influencing the environment as a result of electromagnetic emission

In order to guarantee disturbance-free drive converter operation in the plant or system, the noise in the environment may not be neglected. Thus, special requirements are placed on the design and EMC of the system or plant.

Operational safety and noise immunity

In order to achieve the highest possible operational safety and noise immunity of a complete system or plant (drive converter, automation system, drive motor etc.), the drive converter manufacturer and user must apply certain measures.

Perfect functioning of the drive converter can only be guaranteed and the requirements specified by legislation (89/336/EC) may only be maintained when all of these measures are observed and fulfilled.

Noise emission

The product standard IEC 1800 - 3 (corresponds to EN 61800 - 3) places requirements on drive converters with operating voltages less than 1000 V, and can therefore not be applied to SIMOVERT MV drive converters. The drive converters, as far as the 3-ph. 400 V AC auxiliary power supply is concerned, when correctly used, correspond to the following requirements for use in industrial environments.

2.1.2 Application and operation

SIMOVERT MV drive converters are designed in accordance with EN 50081-2 and EN 50082-2 for use in industrial environments. They may not be operated on public low-voltage networks. They must always be operated with the doors closed.

Radio equipment

It is not permissible to use radio equipment (walkie-talkies) with a radiating power > 2 W close to the drive converter.

For radio equipment with lower outputs, a clearance of > 1 m must be maintained.

Motor feeder cables

The motor feeder cables must be screened. The screen must be grounded at both ends. In addition, a potential bonding conductor (cross-section > 50 mm^2) must be routed between the motor and drive converter (connected to the grounding plate).

Connecting components in the plant/system

All of the components of the plant/system, which are connected using signal cables, must also be connected using potential bonding conductors (exception: components with fiber-optic cable connections), e.g.:

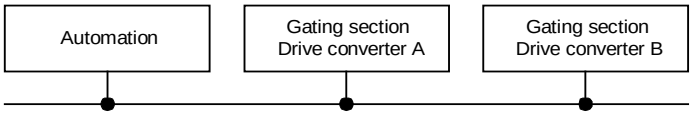

Potential bonding rail and screen rail

Each drive converter cabinet has a potential bonding- and grounding rail to make it easier to connect the potential bonding conductors. All internal and external components must be connected to this potential bonding rail.

All of the cabinets which are involved with networked drives, must be connected using a potential bonding conductor (min. 16 mm^2) (the PE connection on the customer side is not sufficient).

The screens of incoming and outgoing cables must be connected directly to the screen rail (serrated rail). In this case, it must be ensured that the connection is established through the largest surface area to establish a good electrical connection.

Block diagram:

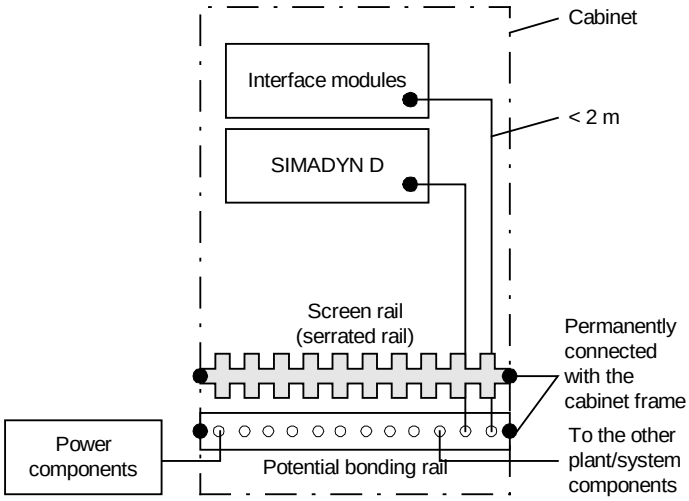

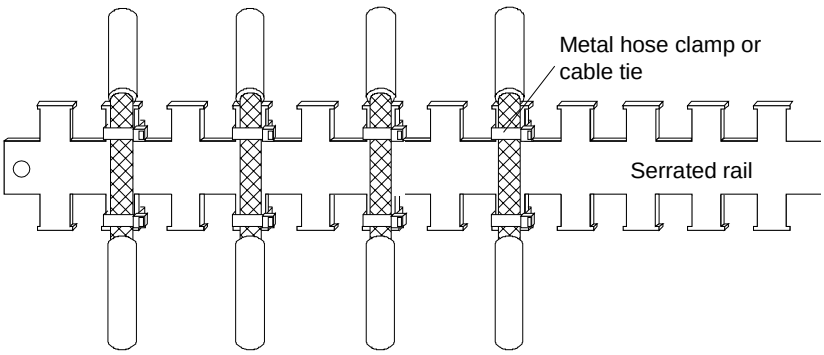

Protective grounding

The protective grounding is connected to the cabinets and the system/plant components using protective conductors (PE). In this case, the grounding plates or the terminal, provided for the auxiliary voltage, can be used.

Note

The potential bonding conductor does not have any protective conductor function; it is used for safe reliable operation and to suppress noise.

The protective conductor must be routed in accordance with DIN VDE 0100 and DIN VDE 0160.

The cabinets should, if possible, be additionally connected to the building ground (building earth) through the largest possible surface area to establish a good electrical connection.

Signal cables, screening

Cables entering the cabinet from outside (e.g. to the terminal modules) may not be routed together with internal cables in a cable duct in the cabinet.

All of the signal cables must have a cable screen. The cable screen should be braided, as cables with a foil-type screens have a screening effect which is poorer by a factor of 5. The cable screens should always be grounded at both ends. Single-sided connections are only advantageous under exceptional circumstances.

For incoming, screened cables (analog and digital signals), the screen must be clamped to the screen rail where the cable enters the cabinet. The cable remains screened up to the terminal module or up to the processing module. No screens are connected to the terminal modules/modules.

Serial connecting cables must be screened. The screen must be connected to a metalized connector housing. In addition, it must be connected to the screen rail. It is not permissible to connect the cable screen to a ground pin of the connector.

A screen just through the connector housing and the front panel of the modules is not effective. The screen cables must be connected at both ends to the screen rails of the cabinets.

Analog signal cables must be routed, both in the cabinet, as well as outside the cabinets, using screened cables.

Cable cores which are not used, must be grounded at both ends to increase the screening effect.

Cable screens grounded at one end

For analog signal cables, with low signal levels (mV. µA), the cable screen is connected at one end in the cabinet, to the screen rail (this avoids ground/earth loops and line-frequency noise which is coupled-in). The open screen end can be connected with the housing through a noise suppression capacitor e.g. 0.1 µF 100 V MKT).

Cable routing

- All of the signal cables must be screened. Separate the signal cables according to signal groups.
  Unscreened cables carrying digital signals must never be routed next to cables carrying analog signals. If you which to use a common signal cable, then the individual signals must be mutually screened.
- Route cables as close as possible to grounded sheet metal surfaces. This reduces the influence of noise.
- Avoid unnecessary long cables. Long cable lengths generate additional capacitances and inductances where noise can be coupled-in.
- A minimum clearance of > 20 cm must be maintained between signal cables and power cables below 500 V AC; a clearance of > 30 cm must be maintained to power cables at over 1 kV AC.
- Crossovers with power cables should, if possible, be made at an angle of 90°.

Note

If the grounding situation is not completely known, it probably makes sense to connect a potential bonding conductor in parallel with each power cable.

Recommended cross-section, 50 mm^2.

Contactors without damping circuitry

It is not permissible to use undampened contactors in the drive converter cabinets. Thus, all of the contactors mounted in the factor have RC circuitry. If undampened contactors are used in an adjacent cabinet, then sheet steel barriers must be installed between the cabinets.

Contactor coils, which are connected to the same supply as the auxiliary power supply of the drive converter, or are located close to the converter, must have overvoltage limiting circuitry (e.g. RC elements, varistors).

Additional wiring

Additional wiring in the cabinet should be kept as short as possible and should be routed as close as possible to the cabinet housing or the mounting panels.

Unscreened cables of the same circuit (incoming and outgoing conductor) must be twisted.

2.2 Connecting the power circuit

Warning

The drive converters are operated at high voltages.

Only qualified personnel may carry-out work on the equipment.

All connecting-up work must be carried-out with the equipment in a no-voltage condition.

The drive converter will be destroyed if the input- and output terminals are interchanged!

The drive converter will be destroyed by interchanging or short-circuiting the DC link terminals!

The user is responsible in ensuring that the drive converter, and other equipment is installed and connected-up in accordance with the recognized regulations in the country of installation as well as other regionally valid regulations. It is especially important that the cables are correctly dimensioned, the equipment suitably protected, grounded, shutdown, isolated and overcurrent protection.

Extreme care must be taken when working on the equipment in an open condition, as external supply voltages may be present. The power terminals and control terminals could be live (under voltage), even when the motor is stationary.

Perfect and safe operation of this equipment assumes that it has been professionally transported, stored, installed and mounted as well as careful operator control and maintenance.

Death, severe bodily injury or significant material damage could occur, if this warning information is not observed.

Note

The circuit diagrams supplied with the equipment are binding for connecting-up the power-, control- and signal cables!

Ground connection

Ground connecting plates are available:

- for the motor connection
- for the rectifier connection
- in the auxiliaries and control section

Note

The grounding cable cross-section is according to VDE 0100 Part 540.

Minimum cross-section 50 mm^2

Motor feeder cables

The motor feeder cables must be screened. The screen must be grounded at both ends. In addition, a potential bonding conductor (cross-section > 50 mm^2) must be routed between the motor and drive converter (connected to the grounding plate).

Maximum conductor cross-sections

Rated motor voltage	Output current	Line side	Motor side
6 and 6,6 kV	65 A to 115 A	2×185 mm^2	2×185 mm^2
	125 A to 145 A	2×185 mm^2	3×185 mm^2
	175 A to 190 A	3×185 mm^2	4×185 mm^2

2.3 Control cable connections

Outputs of the digital SIMADYN D control system

When the power supply voltage is switched-in and switched-out, the outputs can assume undefined statuses as a result of the voltage characteristic. These conditions must be taken into account when configuring/engineering the SIMOVERT MV drive converter as well as when engineering the plant/system (technological controller etc.).

Connecting external voltages

If external voltages are connected to the inputs of the SIMOVERT MV drive converter (e.g. pulse encoders), which are supplied from an external power supply, then these external power supplies must also be shut down when the internal drive converter power supplies are shut down or if they fail.

Note

The circuit diagrams supplied with the equipment are binding for connecting-up the power-, control- and signal cables!

2.3.1 Possibilities of connecting-up the control terminal strip -X100

Cable cross-sections of between 0.5 mm^2 and 4 mm^2 can be connected at control terminal strip -X100.

Connecting the auxiliary supply

The auxiliary supply is connected via terminal strip -X100 in the control cabinet. The power supply is required to supply the control electronics, SIMADYN D subrack, CCU subrack, internal 24 V, GSV (55 V / 100 kHz), the control and the power section of the heat exchanger as well as the drive converter pre-charging.

External equipment (plant/system side) — Internal equipment

Connection, 400 V aux. supply	PE	1A	X100	1B
Cross-section, 4 mm^2	N	2A	X100	2B
		2C	X100	2D
	L1	3A	X100	3B
	L2	4A	X100	4B
	L3	5A	X100	5B
		5C	X100	5D

Jumper assignment for UPS operation

It is possible to buffer the 24 V of the internal terminal strip, the power supply of the GSV (common power supply), the SUL and the SIMADYN D power supply using an uninterruptible power supply. When an uninterruptible power supply is connected, the jumpers of terminal strip –X2 should be changed-over corresponding to the circuit diagrams.

Connecting an external safety circuit

The safety shutdown circuit function is implemented using terminals X100:16A - X100:17A. When this function is used, the jumper, inserted in the factory, must be removed, and replaced by an NC contact.
When the safety shutdown circuit is actuated, the drive converter shuts down with a fault, and the appropriate message appears on the operator panel. The fault must be acknowledged before the drive converter is powered-up again.

Note

This function cannot be used to guarantee that the drive immediately comes to a standstill and no residual voltages are available at the output terminals and inside the equipment.

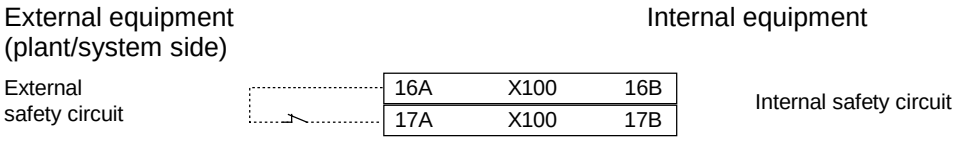

Connecting the circuit-breaker signals

The commands to the circuit-breaker and the appropriate checkback signal are connected to terminal strip –X100.

Note

It is absolutely necessary that the circuit-breaker is controlled via the drive converter. The "circuit-breaker CLOSE", "circuit-breaker "OPEN", "circuit-breaker, undervoltage trip" commands must directly control the circuit-breaker (instantaneously without any delay). Thus, the checkback signals from the circuit-breaker may not be delayed, e.g. interface relays may not be used.

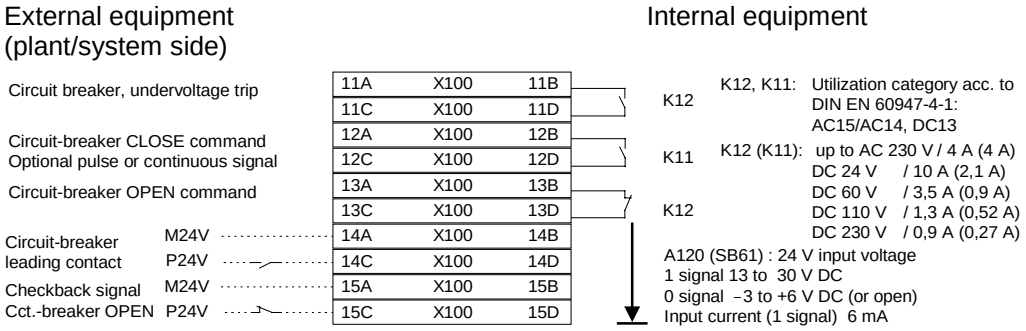

24 V supply

24V is available at terminal strip -X100. These terminals can be used to supply the digital I/O.

Digital inputs

When using an external 24 V supply, the jumper from -X100:47A to -X100:46A must be removed. The external 24 V supply is connected at -X100:46A (ground) and -X100:46C (+24 V).

Digital outputs

After an external 24 V supply has been connected to -X100:46A (ground) and -X100:46C (+24 V), -X100:46B (ground) and -X100:46D (+24 V) can be used to connect-up the digital outputs.

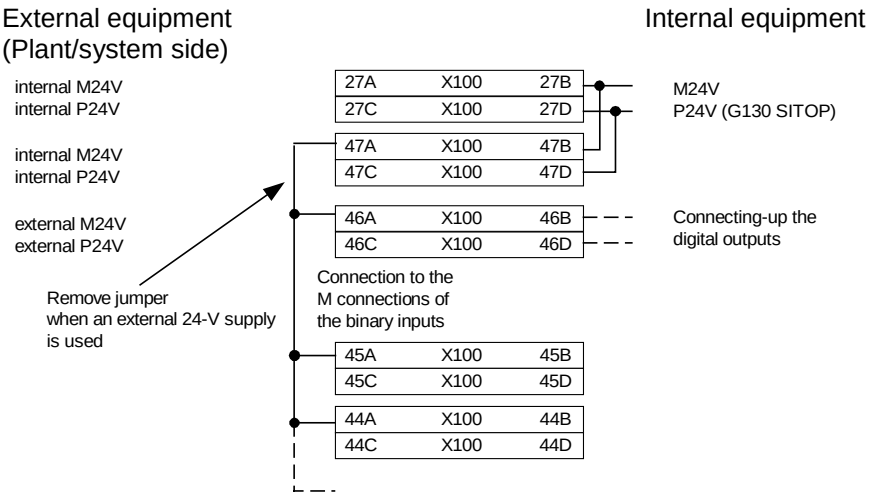

Connecting-up the binary inputs and outputs

Not all of the inputs are always active. When and which inputs are active, depends on the parameterization of the individual functions (also refer to Section 4.2).

Binary inputs

External equipment
(Plant/system side)

Internal equipment

A120 (SB61): 24 V input voltage
1 signal DC 13 to 30 V
0 signal DC –3 to +6 V (or open-circuit)
Input current (1 signal) 6 mA

A121 (SB61): 24 V input voltage
1 signal DC 13 to 30 V
0 signal DC –3 to +6 V (or open-cct.)
Input current (1 signal) 6 mA

A122 (SB61): 24 V input voltage
1 signal 13 to 30 V DC
0 signal –3 to +6 V DC (or open)
Input current (1 signal) 6 mA

M24V
P24VM24 33 fm533 f3.332.91 l 273.62 3 38u7 [(33 f0 0 0.91 l 273.60.332.91 l 33 51 0 0 91 l 248.97.832.91 m 268.75 6 38u7

Binary outputs

External equipment (plant/system side) | Internal equipment

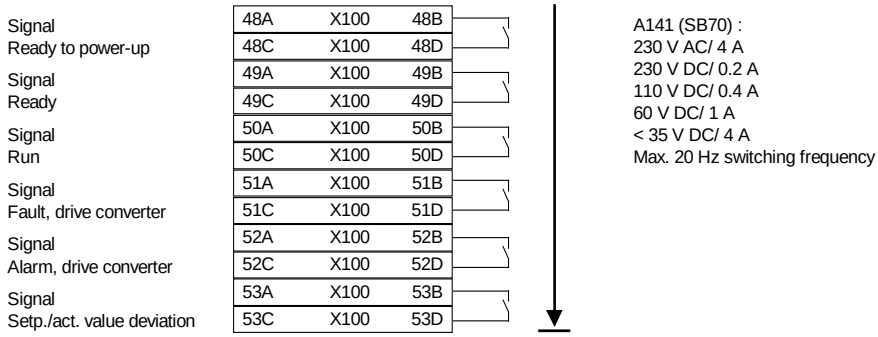

Connecting-up the analog inputs and outputs

4 analog outputs (0 - 10 V) and 4 analog inputs (0 - 10 V) are available. Isolating amplifiers are optionally installed for 4-20 mA signals.

Analog inputs

External equipment (Plant/system side) | Internal equipment

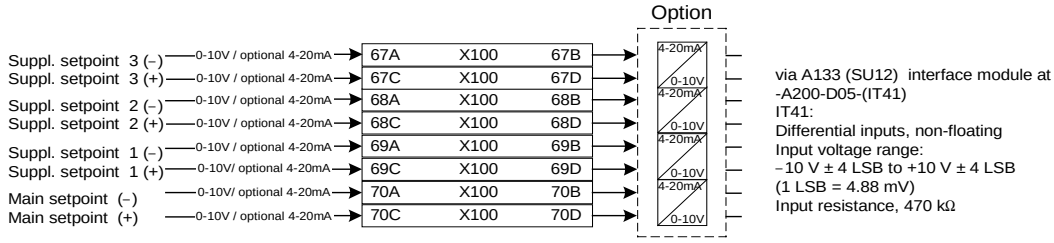

Analog outputs

External equipment (plant/system side) | Internal equipment

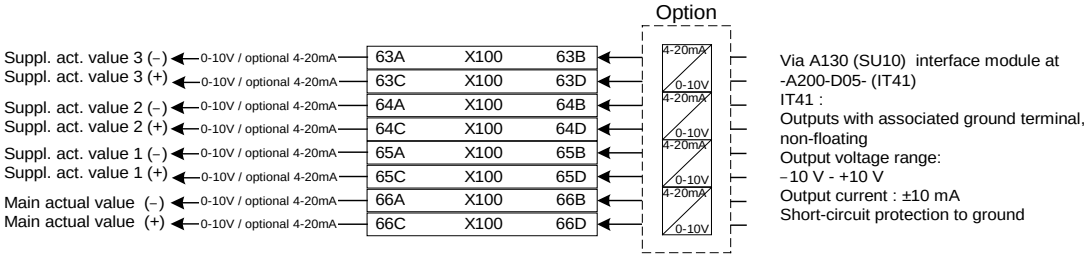

Connecting-up the digital speed actual value encoder

The tachometer signals should be connected at terminal strip -X100.

External equipment
(plant/system side)

Internal equipment

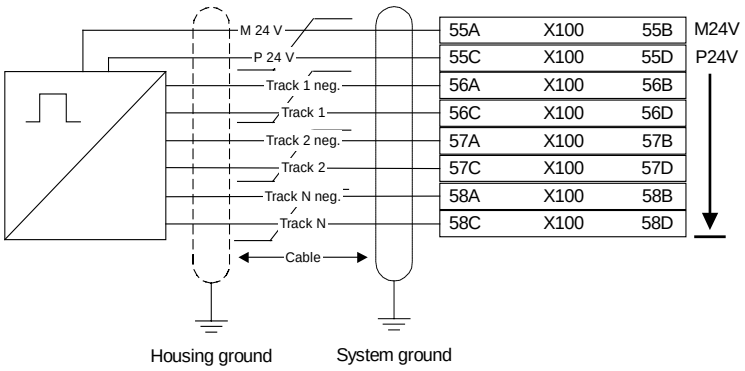

from SITOP
G130 power supply

A131 (SU10) interface module 1:1 to
-A200-D05- (IT41)
SU10 : Voltage range ±60 V
Current range, max. 0.5 A
IT41 :
Input voltage range:
Differential voltage, –30 V to +30 V
0 signal –30 V to +4 V
1 signal +8 V to +30 V
Max. pulse frequency, 1 MHz
Phase difference of the track signals
Min. 200 ns

2.3.2 Automation interface

The automation interface is at slot X03 on board CS7. Slot X03 has an interface module SS52 (Order No.: 6DD1688-0AE2).

This module supports Profibus SINEC L2 DP.

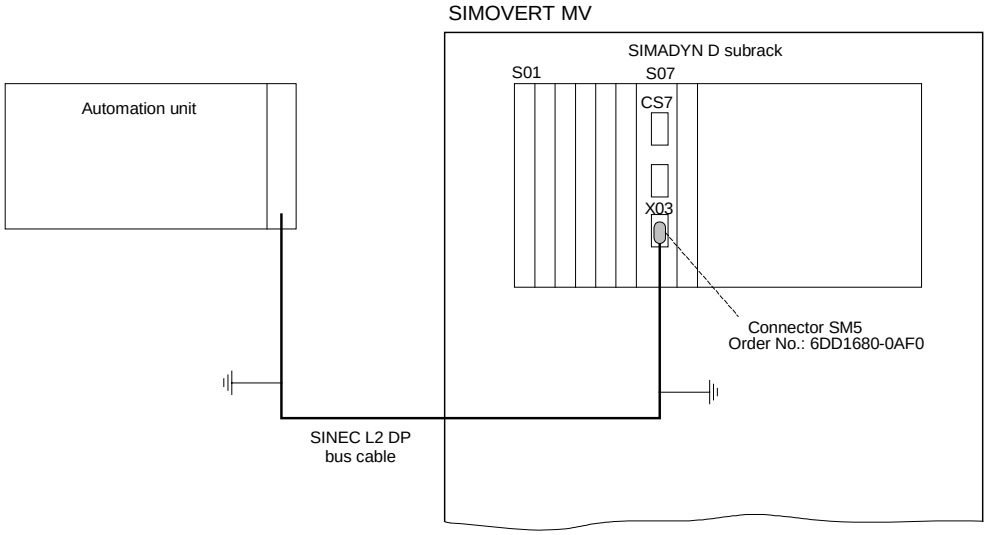

Fig. 2.1 Connecting the automation unit to the CS7 board

Permissible cable lengths

Maximum permissible cable lengths for the SINEC L2 DP bus cable (Order No.: 6VX1830-0AH10, 6VX1830-0BH10, 6VX1830-3AH10, 6VX1830-3BH10, 6VX1830-3CH10):

Baud rate	Cable length
9.6 to 187.5 kbaud	max. 1000 m
500 kbaud	max. 400 m
1.5 Mbaud	max. 200 m
3 - 12 Mbaud	max. 100 m

3 Selected functions

3.1 Protective functions

3.1.1 Safety shutdown

The safety circuit consists of hardware contacts in series. This arrangement guarantees that the circuit-breaker can always be opened, even after a program error.

Note

This function can neither be used to guarantee that the drive comes to an immediate standstill nor that there are no residual voltages at the output terminals and inside the equipment.

Individual components of the safety circuit

Mushroom head pushbutton

The SIMOVERT-MV drive converter is equipped with a mushroom head pushbutton in the door. If the circuit is opened using this pushbutton, the relay K12 drops-out (refer to Fig. 3.1).

Safety shutdown from the SUL module

The sub-station is monitored using a relay contact of the SUL module. This relay is closed, if the following conditions are fulfilled:

1. Communications between the ISL and SUL modules is undisturbed (fiber-optic cable link)
2. The power supply for the sub-station is greater than 19.5 V.
3. The cyclic program on the sub-station is operating error-free.
4. The short-circuiting device is not active.
5. Binary input No. 4 of the SUL module is high.

If one of these conditions is not fulfilled, the circuit-breaker is opened and the crowbar thyristor triggered.

Operating current- and undervoltage release

The circuit-breaker is tripped via the safety relay.

- **Working current release**

This contact changes from low to high for a circuit-breaker OPEN command. The circuit-breaker is opened with a rising edge. This command circuit is not wire-breakage proof.

- **Undervoltage release**

This contact changes from a high to a low for a circuit-breaker OPEN command. The circuit-breaker identifies an undervoltage condition for a falling edge, and opens. This command circuit is wire breakage proof.

For SIMOVERT drive converters, the circuit-breaker must be equipped with an undervoltage release, in order to ensure that the circuit-breaker OPEN command is wire-breakage proof.

Limit switch

The doors of the power section are monitored using limit switches. If this circuit is interrupted, a circuit-breaker OPEN command is output via the SUL module, and the crowbar thyristor is then triggered.

Safety shutdown from SIMADYN D

The relay contact of the buffer memory module is closed as soon as the SIMADYN D subrack was initialized and cyclic program processing has started.

If the system crashes on a module in the SIMADYN D subrack, this relay drops-out, and the circuit-breaker is opened.

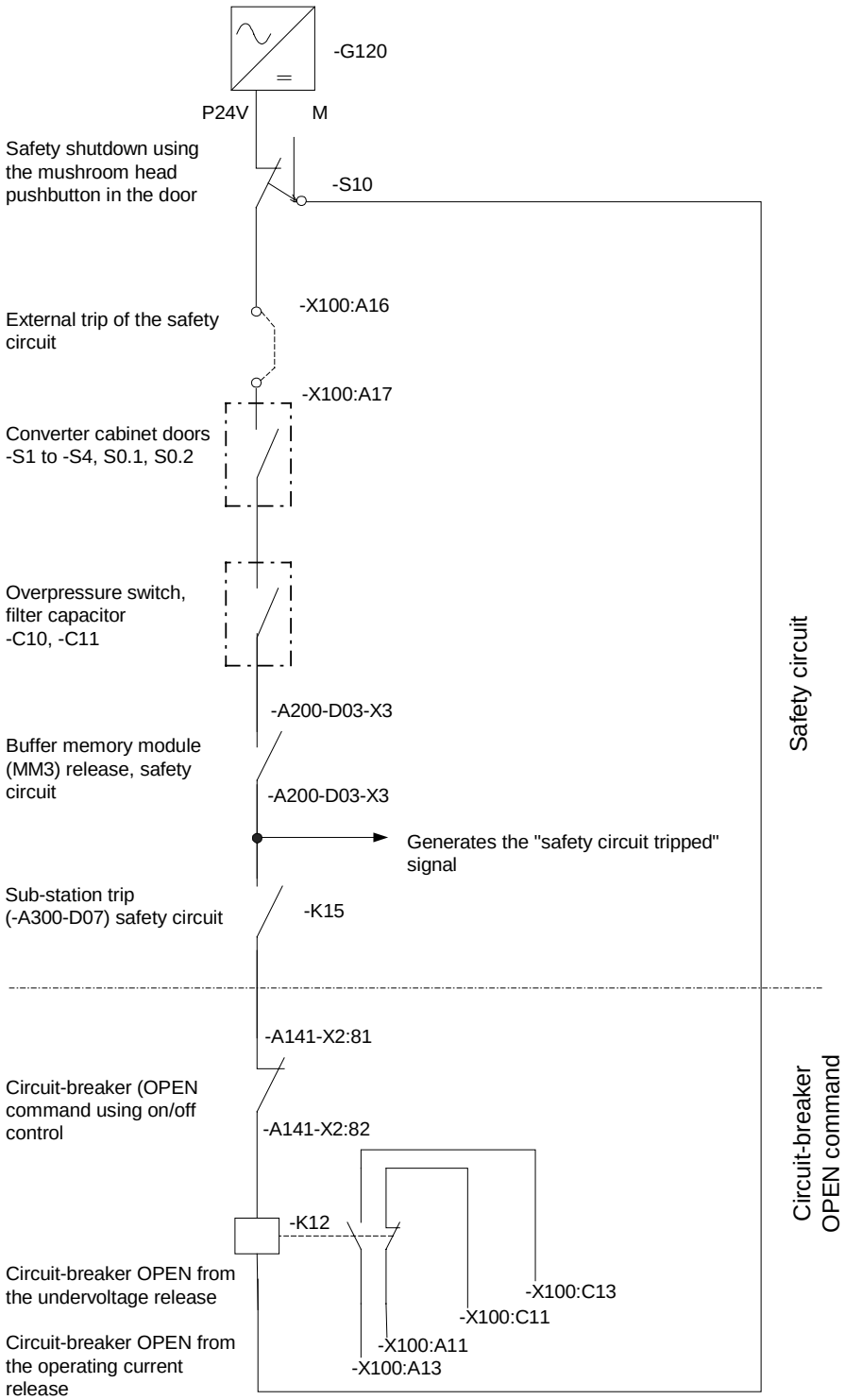

Fig. 3.1 Safety circuit and circuit-breaker OPEN command

3.1.2 Insulation monitoring

Description

The SIMOVERT DRIVE drive converter is operated, non-grounded through an IT supply network. For safety reasons it is necessary to be able to detect an insulation fault. For this reason, SIMOVERT drive converters are equipped with a system, which continually monitors the insulation conditions of the drive converter, including that of the motor. The drive converter is shutdown with a fault condition (fault class 1) if an insulation fault develops. Only one insulation monitoring device may be connected in each connected IT supply system.

It automatically adapts itself to the line supply discharge capacitance.

The monitoring system must be isolated from the line supply for the duration of the test, before insulation- and voltage tests and checks are made in the supply network.

Setting information

The values for "Alarm1/2" in the setup must be set appropriately high due to the series resistance R190 and grounding resistor R15 . The following setting values are recommended: For "Alarm1" = 900 kΩ = "Alarm2".

Under certain circumstances, the values must be adapted to the requirements of the network to be monitored.. For example, for a 0 Ω ground fault at the C(+) rail, an insulation resistance is displayed which is the same as the integrated resistor R190:

R190 = 140 kΩ for a 6 kV and 6.6 kV rated motor voltage

When the recommended setting value is not used, it should be observed that the value is always greater than that of resistor R190 and lower than R190 + R15 .

Example:

R190 = 140 kΩ, permissible insulation resistance > 180 kΩ ⇒

"Alarm1" = 320 kΩ = "Alarm2"

Basic settings

SETUP1
ALARM1=900k
ALARM2=900k
K1: 12 - 11 14
K2: 22 - 21 24

SETUP2
ALARM1: AC OR DC
ALARM2: AC OR DC
AGH: AK...AK80
COUPLING TEST : ON
FLASH: OFF
RELAYTEST: ON
CE MAX: 150µF
PASSWORD: OFF

Self-test

The A-ISOMETER IRDH265 automatically executes a self-test, if the insulation resistance of the line supply is > 20 MΩ, or every 24 h, if an output relay was pre-selected for the system error message.

Connection monitoring

The connections to the line supply and ground (PE) are permanently monitored. If the cables/conductors are interrupted, are not connected or there is a very high-ohmic connection, "ALARM E-KE" or "ALARM L1-L3" signals are displayed on the LCD.

In this case, immediately check all of the connecting cables, as the insulation resistance cannot be correctly measured.

In new or small IT supply networks, the insulation resistance can lie in the range > 20 MΩ. In this case, the message is also output. In this case, the connection monitoring must be disabled in Setup2.

Design

The system comprises the coupling device AGH5205 with series resistor and the evaluation unit A-ISOMETER IRDH265-.. (refer to connection circuit-diagram).

The unit is mounted in a plastic housing and can be snapped-onto a mounting rail, in accordance with DIN EN 50022; it can also be screwed to a panel.

The AGH520S coupling device is connected upstream of the A-ISOMETER through series resistors to couple to the voltage to be monitored and to limit the measuring current under fault conditions.

Function description

The A-ISOMETER type IRDH265 is connected between the ungrounded line supply and the potential bonding conductor (PE).

Operator keys <4, 5, 6> are used to set the response values and other function parameters. The parameters are shown on the LCD display and are saved in a non-volatile memory (EEPROM) after the setting has been completed.

A microcontroller-based pulse-shaped alternating measuring voltage is superimposed on the line supply. The measuring pulse comprises positive and negative pulses of the same amplitude. The period depends on the particular discharge capacitances and the insulation resistances of the line supply to be monitored. The measuring circuit is closed if an insulation fault occurs between the line supply and ground. The evaluation circuit determines the insulation resistance, which is indicated on the LCD display after the measured value sensing time.

The measured value sensing time is a function of the line discharge capacitance, the insulation resistance as well as possible line-relevant faults. Line discharge capacitances do not influence the measuring accuracy.

When the selected response values ALARM1 / ALARM2 are fallen below, the associated output relays <11, 12> respond, the signaling LED "ALARM1/2" <1, 2> is lit (goes bright) and the LCD display <7> indicates the measured value. If the LT terminals are jumpered (external RESET button <9> [NC contact] or wire jumper), the fault signal is saved.

The function of the A-ISOMETER IRDH265 can be tested using test button <3>. "TEST" is displayed after the test button is pressed (> 2 s). If a fault is not identified, "TEST OK R < 1 kOhm" is displayed after the response time has expired, the output relays switch, and both signaling LEDs light-up (go bright). If a system fault is identified during the test, "TEST ALARM" is displayed on the LCD. The faults are acknowledged by pressing the "TEST/RESET" button <3> (< 1 s).

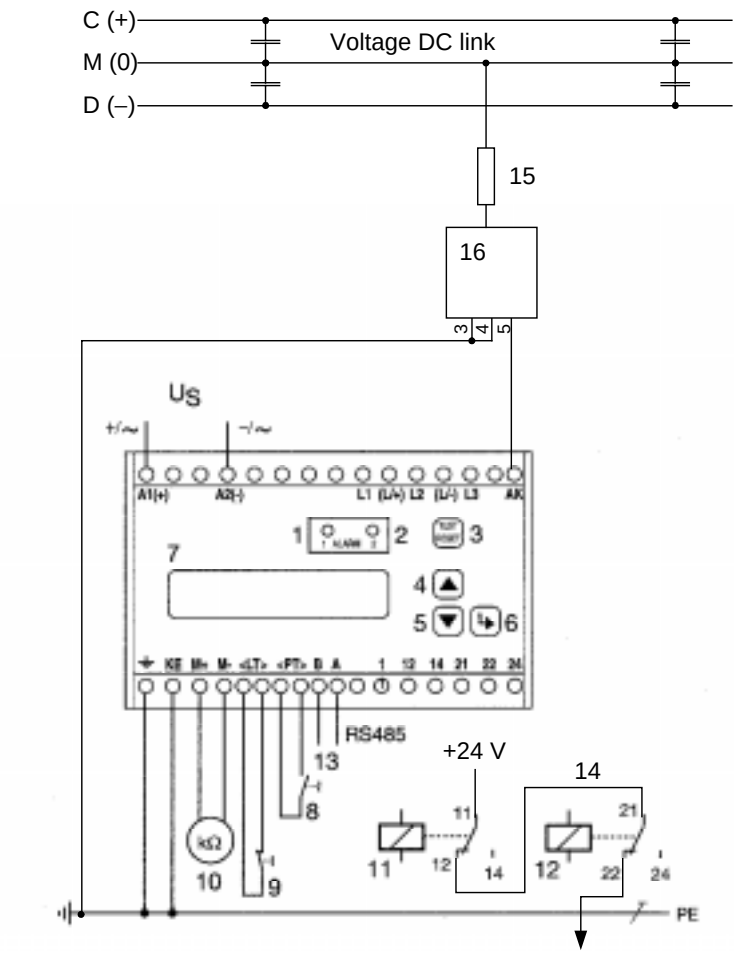

Legend, connection circuit-diagram

1 Yellow signaling LED, is lit, if the selected response value RALARM1 is fallen below

2 Yellow signaling LED, is lit, if the selected response value RALARM2 is fallen below

3 Integrated TEST/RESET button
Pressed briefly (« 1 s) = reset
Pressed longer (> 2 s) = test

4, 5, 6 Operator buttons

7 Integrated LCD for the measured value display and displaying the selected parameters

8 External test button (not used)

9 External delete button (not used)

10 External kΩ display instrument (analog) (not used, connection possible)

11 Output relay K1 with a changeover contact (R_{ALARM1})

12 Output relay K2 with a changeover contact (R_{ALARM2})

13 RS485 interface (not used)

14 Monitored by the control (SUL module)

15 Series resistor

16 Coupling device (AGH520S)

Handling and setting

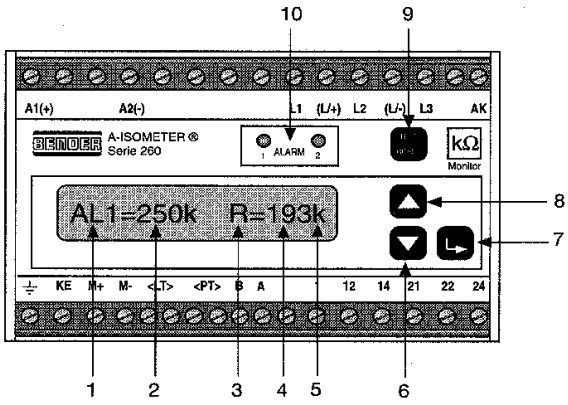

1 AL1 = alarm 1, AL2 = alarm 2

2 Selected response value (kΩ)

3 Fault location

„+“ = Insulation fault on L+

„–“ = Insulation fault on L–

„s“ = New measured value is searched for

4 Measured value

5 Unit, meas. value (k = kΩ, M = MΩ)

6, 7, 8 Control buttons

9 TEST/RESET button

10 Signaling LED alarm 1 / alarm 2

♦ Operator buttons

A parameter can be changed or another selected with a menu, using buttons 6, 8.

The next menu item is selected or a parameter change is saved using button 7.

You can jump back to the previous menu using button 9 (only in the set-up menu)

For all of the setting procedures, the insulation monitoring is interrupted for the time it takes to make the settings! If the setting procedure is interrupted without a correct return into the measuring routine, the device automatically switches back into the measuring mode after approximately 10 min. All of the changes are transferred.

♦ Alarm- and measured value display

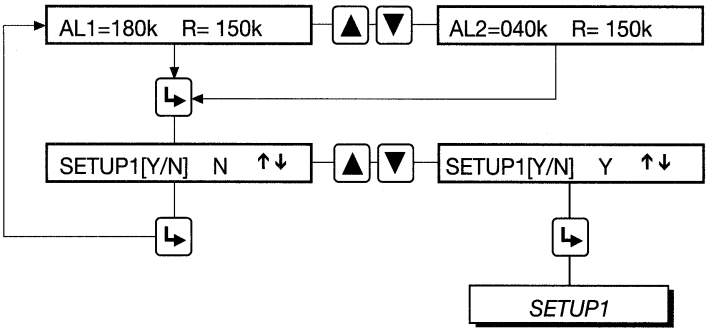

After the start-up, the current measured value and an alarm value are displayed the second alarm value can be displayed using the operator button, 6, 8.

You can branch into Setup1 by pressing button 7.

♦ **Setting the basic functions (Setup1)**

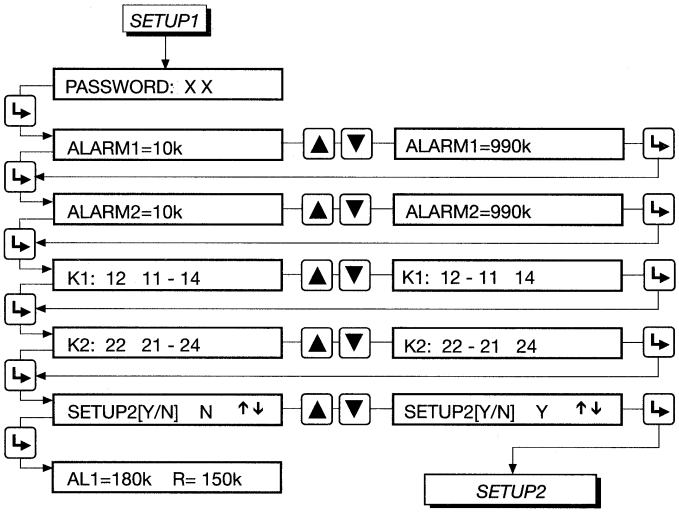

Password [PASSWORD: XX]

The “Password” interrogation is only realized, if this was set to “ON” in Setup2. The password comprises two letters (e.g. AB). The flashing letter can be changed using buttons 6, 8. After button 7 has been pressed, the second letter flashes, and can also be changed. The password entry is completed using button 7. If an incorrect password was entered, the A-ISOMETER jumps back to the measured value display.

Response values R_{ALARM} [ALARM1= 10k] / [ALARM2= 10k]

The alarm values 1 and 2 are each set using buttons, 6, 8, and are stored by pressing button 7.

Mode of operation K1/K2 [Term.: 12 - 11 14]

The hyphen between the contact names indicates which contact is closed in the fault-free condition:

– Open-circuit operation "K1: 12 - 11 14"
– Closed-circuit operation "K1: 12 11 - 14"

Branching into Setup2 [SETUP2 [Y/N] Y]

You can branch into Setup2 in this menu.

♦ **Setting the extended functions (Setup2)**

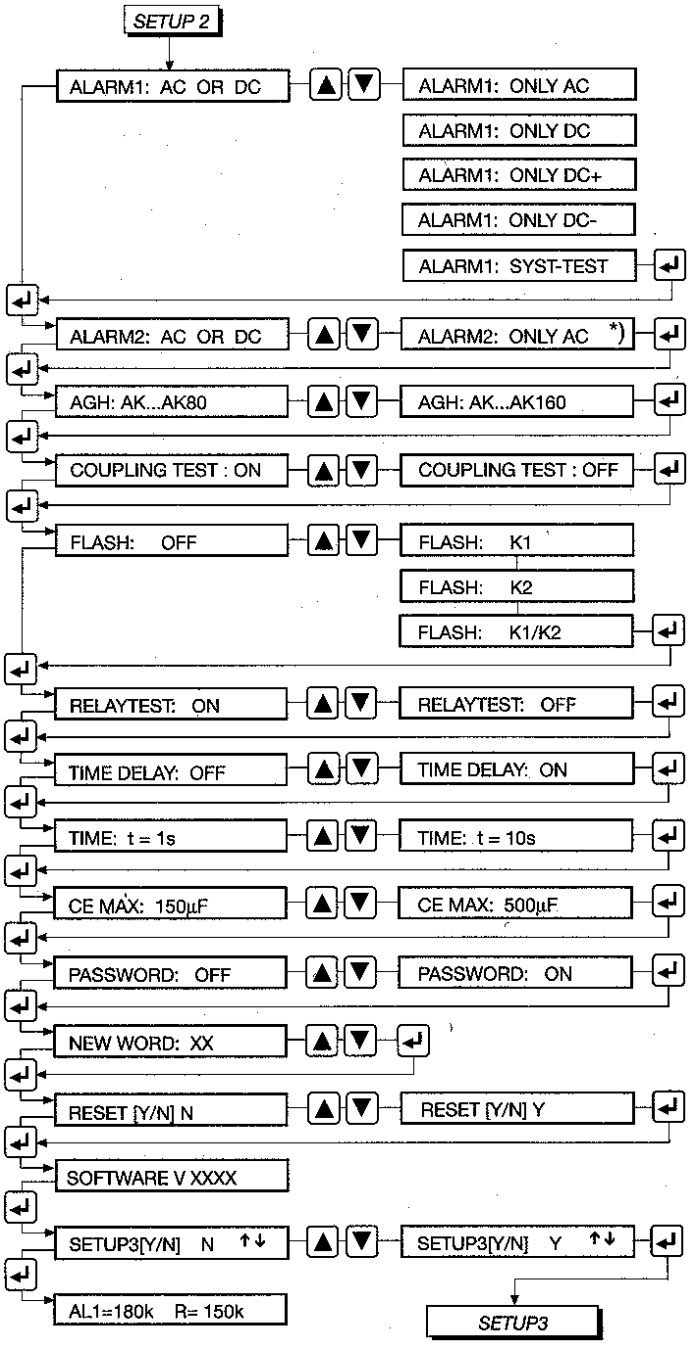

No settings may be made in SETUP3. In this case, it involves factory settings for the measuring technique.

Release versions, ALARM 1/ 2 [ALARM: ONLY AC]

The types of insulation faults which could be signaled can be defined in this menu.

The following versions are possible:

AC OR DC	=	Signal for AC- or DC faults
ONLY AC	=	Signal only for AC- or symmetrical DC faults and faults in the no-voltage line supply
ONLY DC	=	Signal only for single-pole DC faults
ONLY DC+	=	Signal only for single-pole DC-faults on L+
ONLY DC–	=	Signal only for single-pole DC-faults on L–
SYST	=	Signal only for system faults. The 24 hour self-test is activated.

Certain combinations of the release versions for alarm 1/2 are not possible, as otherwise no signal will be output. The following combinations are possible:

ALARM 1	ALARM2
AC OR DC	AC OR DC
AC OR DC	ONLY DC
AC OR DC	ONLY AC
AC OR DC	SYST
ONLY AC	AC OR DC
ONLY AC	ONLY DC
ONLY DC	AC OR DC
ONLY DC	ONLY AC
ONLY DC+	ONLY DC– *)
ONLY DC–	ONLY DC+ *)
SYST	AC OR DC

*) This setting may only be used in pure DC IT supply networks!

Coupling device settings (AK TERMINAL) [AGH: AK...AK80]

The IRDH265 and IRDH365 is connected to terminal AK at terminal 5 of AGH520S. The operating range of the rated voltage is extended to 0 ... 7200 V AC.

Note

It is not permissible that the drive converter is connected to the line supply!

Connection monitoring [COUPLING TEST: ON]

The automatic monitoring of the line supply connection can be enabled/disabled in this menu. As this connection monitoring represents an essential safety aspect for monitoring the line supply, it should always be enabled.

Activating the flash function [FLASH: ...]

The output relay K1/K2 and the associated signaling LED can be switched to flash (1 Hz clock frequency).

Flash OFF	=	K1 and K2 not flashing
Flash K1	=	K1 flashing, K2 not flashing
Flash K2	=	K2 flashing, K1 not flashing
Flash K1/K2	=	K1/K2 flashing

Output relay signal for the function test [RELAYTEST: ON]

In this menu, the output relay switching can be disabled for a function test (= relay test : OFF).

Response delay on [TIME DELAY: ON]

In this menu, a response delay can be activated for the output relay. This setting is only possible, if the A-ISOMETER was set to the dissymmetry or DC voltage superimposition measuring technique. The selected response delay only acts on the alarm stages with this measuring technique, and is added to the response time.

Setting the response delay [TIME: t=1s]

If the response delay is active, the appropriate time can be set here.

Setting the line supply discharge capacitance [CE MAX: 150µ]

The A-ISOMETER can be adapted to the max. line supply discharge capacitance in this menu (max. 500 µF). Please note, that for the setting C_E = 500 µF, the basic measuring time is increased to approx. 15 s

Activate password [PASSWORD: OFF]

A “Password" interrogation can be activated in this menu. This allows the A-ISOMETER to be protected against unauthorized changes to the settings.

Enter password [NEW WORD: XX]

A new password can be entered in this menu. The password is only saved after an acknowledgement using a password interrogation.

RESET for the basic setting [RESET [Y/N] N]

All settings can be reset to the factor setting in this menu.

Display software version [SOFTWARE VXXX]

The software version is displayed on the LCD in this menu.

3.2 Open-loop control functions

The open-loop control of the SIMOVERT MV drive converter with commands and setpoints can be executed from various sources. Vice versa, information about the drive converter status and actual values can be simultaneously output via several channels.

The following can be considered as sources:

- Local functions (pushbuttons, operator panel, analog displays)
- Terminal strip (binary and analog remote control signals and checkback signals)
- PROFIBUS DP (PPO type 4 with 6 process data in both directions)

The binary control commands and status information are described in more detail in this section.

Control commands

The control functions are combined in two **internal** control words and transferred to the power-on logic. The drive converter responds exclusively to these internal control words. The drive converter response to the control commands essentially corresponds to the PROFIDRIVE profile.

Command	**Internal control word**		**Local**	**Terminal strip**		**Serial interface PROFIBUS DP**	
	Position	Active with	Operator unit	Position	Active with	Position	Active with
ON	Word 1 bit 0	H	ON button	X100: 33A/C	H [1)]	STW 1 bit 0	H
OFF1	Word 1 bit 0	L	OFF button	X100: 34A/C	L	STW 1 bit 0	L
OFF2	Word 1 bit 1	H	–	X100: 35A/C	L	STW 1 bit 1	L
OFF3	Word 1 bit 2	H	–	–	–	STW 1 bit 2	L
Inverter enable	Word 1 bit 3	H	–	X100: 36A/C	H	STW 1 bit 3	H
RFG enable	Word 1 bit 4	H	–	X100: 37A/C	H	STW 1 bit 4	H
RFG hold	Word 1 bit 5	H	–	X100: 38A/C	H	STW 1 bit 5	H
Setpoint enable	Word 1 bit 6	H	–	X100: 39A/C	H	STW 1 bit 6	H
Acknowledge	Word 1 bit 7	H	OP2 button B4	X100: 40A/C	H [2)]	STW 1 bit 7	H [2)]
Inching	Word 1 bit 8	H	–	X100: 41 .. 44 *)	H	STW 1 bit 8	H
Control from automation	Word 1 bit 10	H	–	–	–	STW 1 bit 10	H
Clockwise rotating field	Word 1 bit 11	H	–	X100: 41 .. 44 *)	H	STW 1 bit 11	H
CCW rotating	Word 1	H	–	X100:	H	STW 1	H

Command	Internal control word		Local	Terminal strip		Serial interface PROFIBUS DP	
	Position	Active with	Operator unit	Position	Active with	Position	Active with
field	bit 12			41 .. 44 *)		bit 12	
Motorized potentiometer, raise	Word 1 bit 13	H	–	X100: 41 .. 44 *)	H	STW 1 bit 13	H
Motorized potentiometer, lower	Word 1 bit 14	H	–	X100: 41 .. 44 *)	H	STW 1 bit 14	H
Select fixed setpoint, bit 0	Word 2 bit 12	H	–	X100: 41 .. 44 *)	H	STW 2 bit 12	H
Selected fixed setpoint, bit 1	Word 2 bit 13	H	–	X100: 41 .. 44 *)	H	STW 2 bit 13	H
Select, c-l torque control	Word 2 bit 14	H	–	X100: 41 .. 44 *)	H	STW 2 bit 14	H
External fault	Word 1 bit 15	H	–	X100: 31A/C	L	STW 1 bit 15	H
External alarm	Word 2 bit 9	H	–	X100: 32A/C	L	STW 2 bit 9	H
Safety shutdown	Word 2 bit 11	H	Mushroom head push-button	X100: 16A/17A	Not jumpered	STW 2 bit 11	H
Checkback signal, trans-former ready	Word 2 bit 0	H	–	–	–	STW 2 bit 0	H
Checkback signal, trans-former alarm	Word 2 bit 1	H	–	–	–	STW 2 bit 1	H
Checkback signal, trans-former fault	Word 2 bit 2	H	–	–	–	STW 2 bit 2	H
Checkb. signal, motor ready	Word 2 bit 3	H	–	–	–	STW 2 bit 3	H
Checkb. signal, motor alarm	Word 2 bit 4	H	–	–	–	STW 2 bit 4	H
Checkb. signal, motor fault	Word 2 bit 5	H	–	–	–	STW 2 bit 5	H
Checkback signal cooling unit ON	–	–	–	X100: 45A/C	H 3)	–	–
Checkback signal cooling unit alarm	Word 2 bit 7	H	–	X100: 43A/C	L 3)	STW 2 bit 7	H
Checkback signal cooling unit fault	Word 2 bit 8	H	–	X100: 44A/C	L 3)	STW 2 bit 8	H
Circuit-breaker	–	–	–	X100:	H 4)	–	–

Command	Internal control word		Local	Terminal strip		Serial interface PROFIBUS DP	
	Position	Active with	Operator unit	Position	Active with	Position	Active with
leading contact				14A/C			
Checkback signal circuit-breaker off	Word 2 bit 10	H	–	X100: 15A/C	H 5)	STW 2 bit 10	H

*) The function can be selected using the parameterizable inputs:

- Inputs X100:41 ... 44 for air-cooled drive converters
- Inputs X100:41 ... 42 for water-cooled drive converters

1) H continuous signal or H pulse
2) H pulse
3) These inputs are only used for water-cooled drive converters. For air-cooled drive converters, they can be parameterized
4) Factory setting, for an L signal level, P280 (FP-ULS, C50.I) must be set to 0
5) Factory setting, for an L signal level, P268 (FP-ULS, A80.I) must be set to 1

The internal control words have the following functions:

Internal control word 1

Bit 0 **ON/OFF 1 with H signal level**
The command is only executed in the READY TO POWER-ON condition. After the command has been accepted, the system changes-over into the PRECHARGING status.
The pre-charging is executed, the system changes into the READY status, and then into the RUN status. If the signal changes from H to L, this signifies an OFF1 command. The system goes into the OFF1 status after the command has been accepted. The setpoint is inhibited at the ramp-function generator input (setpoint = 0), so that the drive ramps-down along the down ramp (P464). The inverter pulses are inhibited and the circuit-breaker is opened after the OFF (OPEN) shutdown frequency has been reached. Change into the READY TO POWER-UP status.

Bit 1 **OFF2**
After the command has been accepted, the inverter pulses are inhibited and the circuit-breaker is opened. The system changes into the POWER-ON INHIBIT status.

Bit 2 **OFF3**
After the command has been accepted, the setpoint at the ramp-function generator input is inhibited (setpoint = 0), so that the drive decelerates along the parameterized fast stop ramp for OFF3 (P353) to the OFF shutdown frequency (P405 = threshold value, P406 = hysteresis). The pulses are then inhibited and the circuit-breaker opened. The system changes over into the POWER-ON INHIBIT status.

Bit 3 **Inverter enable**
After the inverter enable command (H signal) has been accepted, if the READY status is available and the de-energization time (P704) has expired since the last shutdown, the system changes into the OPERATION status, the inverter pulses are enabled and the setpoint is approached along the ramp-function generator ramp. The INVERTER INHIBIT command (inverter inhibit) is executed with an L signal.

After the command has been accepted, the system changes into the READY status, the inverter pulses are inhibited. If the OFF1 status is available, the inverter pulses are inhibited and the circuit-breaker opened.

Bit 4 **Ramp-function generator enable**
After the ramp-function generator (RFG) enable command has been accepted, the ramp-function generator is enabled, and it approaches the setpoint.

Bit 5 **Ramp-function generator hold**
After the RFG hold command has been accepted, the actual setpoint at the ramp-function generator output, is held (frozen).

Bit 6 **Setpoint enable**
After the setpoint enable command has been accepted, if the energization time (P704) has expired, the setpoint at the ramp-function generator input, is enabled.

Bit 7 **Acknowledge (1 s pulse)**
The command is only executed in the FAULT status. After the command has been accepted, all of the actual faults are deleted. The individual fault messages can be viewed, with date and time, in the OP2 message memory. The messages are retained until they have been specifically deleted using the OP2. If there are no faults, the system changes into the POWER-ON INHIBIT or READY TO POWER-UP status. If faults are present, the drive converter remains in the FAULT status.

Bit 8 **Inching**
After the inching command has been accepted, the inching frequency is enabled in the setpoint channel. When the signal is withdrawn, the setpoint, which is parameterized as main- or supplementary setpoint, is enabled.
Inching is only enabled after the inverter-, ramp-function generator- and setpoint have been enabled.

Bit 9 **Free**

Bit 10 **Control from the automation system**
After the command has been accepted, the process data PZD (control word, setpoints) are evaluated, which are sent via the interface. Otherwise, the last interface values which were saved, are maintained.

Bit 11 **Clockwise rotating field selection**
After the command for clockwise rotating field has been accepted, depending on the assignment of the "counter-clockwise rotating field" command, the setpoint is influenced. The counter-clockwise/clockwise changeover is enabled in parameter P330. A defined changeover must be made at the selected sources. If none, or both directions are selected, then the alarm message "undefined direction of rotation" alarm message is output

Bit 12 **Counter-clockwise rotating field selection**
After the command for counter-clockwise rotating field has been accepted, the setpoint is influenced depending on the assignment of the "clockwise rotating field" command. Refer to the "Function diagram, setpoint channel". The counter-clockwise/clockwise changeover is enabled in parameter P330. The selected sources must be changed-over in a defined fashion. If none, or both directions of rotation are selected, the "direction of rotation undefined" alarm message is output

Bit 13 **Motorized potentiometer, raise**
After the command has been accepted, the motorized potentiometer is controlled in the setpoint channel according to the assignment of the "motorized potentiometer, lower" command. Also refer to "function diagram, setpoint channel".

Bit 14 **Motorized potentiometer, lower**
After the command has been accepted, the motorized potentiometer is controlled in the setpoint channel, depending on the assignment of the "motorized potentiometer, raise". command. Also refer to the "function diagram, setpoint channel".

Bit 15 **External fault**
After the command has been accepted, the system changes-over into the FAULT status.
The inverter pulses are inhibited and the circuit-breaker is opened.

Internal control word 2 (being prepared)

Internal control word 2 includes additional signals to remotely control the drive converter.

The checkback signals, combined in this control word, which have been received from drive components external to the drive converter, can be used to issue messages and to trip the drive (shutdown the drive) when faults occur. The checkback signals from the transformer and motor can only be read-in via a higher-level automation or PLC, and output to the drive converter via the serial interface.

Internal Control word 2

Bit 0 **Checkback signal, transformer ready**

Bit 1 **Checkback signal, transformer alarm**

Bit 2 **Checkback signal, transformer fault**

Bit 3 **Checkback signal, motor ready**

Bit 4 **Checkback signal, motor alarm**

Bit 5 **Checkback signal, motor fault**

Bit 6 **Free**

Bit 7 *signal, cooling unit alarm (only for water cooling)*

Bit 8 **Checkback signal, cooling unit fault (only for water cooling)**

Bit 9 **External alarm**

Bit 10 **Checkback signal, circuit-breaker OPEN**

Bit 11 **Command, safety shutdown**

Bit 12 **Selection, fixed setpoint bit 0**
One of 4 possible fixed setpoints can be selected using the fixed setpoint bits. Also refer to the function diagram "setpoint channel″.

Bit 13 **Select fixed setpoint bit 1**
One of 4 possible fixed setpoints can be selected using the fixed setpoint bits. Also refer to the "setpoint channel" function diagram.

Bit 14 **Speed/torque control selection**
The command switches the drive from closed-loop speed control to closed-loop torque control. Also refer to the function diagrams, closed-loop speed control.

Bit 15 **Not assigned**

Checkback signals

Checkback signal	Status word power-on logic		Local	Terminal strip		Serial interface PROFIBUS DP	
	Position	Active with	Operator unit	Position	Active with	Position	Active with
Ready to power-up	Bit 3	H	–	X100: 48A/C	H	ZSW bit 0	H
Ready	Bit 2	H	–	X100: 49A/C	H	ZSW bit 1	H
Operation	Bit 0	H	White lamp	X100: 50A/C	H	ZSW bit 2	H
Fault	Bit 5	H	Red lamp	X100: 51A/C	L	ZSW bit 3	H
Off	Bit 1	H	Green lamp	–	–	–	–
OFF 2 present	–	–	–	–	–	ZSW bit 4	L
OFF 3 present	–	–	–	–	–	ZSW bit 5	L
Power-on inhibit	Bit 4	H	–	–	–	ZSW bit 6	H
Alarm available	–	–	Yellow lamp	X100: 52A/C		ZSW bit 7	H
Setpoint-actual value deviation	–	–	–	X100: 53A/C		ZSW bit 8	L
PZD control requested	–	–	–	–	–	ZSW bit 9	H
Comparison frequency reached	–	–	–	–	–	ZSW bit 10	H
Reserve changeover active	–	–	–	–	–	ZSW bit 11	H

Internal status word

The checkback signals from the open-loop control of the drive converter are combined in an internal status word. The bit positions of the status word have the following significance:

Bit 0 **"Ready to power-on" message**

This indicates that the drive is in the READY TO POWER-ON status. The power supply, open- and closed-loop control are operational. The inverter pulses are inhibited. The DC link is not charged-up.

Bit 1 **"Ready" message**

This indicates that the system is in the READY or PRE-CHARGING operating status. The power supply, the open- and closed-loop control are operational. The unit is powered-up, pre-charging has been completed (is being executed), the DC link has either the full DC link voltage or is being ramped-up to the full voltage, the inverter pulses are still inhibited

Bit 2 **"Operation" message**

This indicates that the system is in the OPERATION operating status. The unit is functioning, i.e. the inverter pulses are enabled and the output terminals are at a specific voltage potential.

Bit 3 **"Fault" message**

Indicates that the system is in the FAULT operating status. If the fault is output at terminals, an L signal appears there for this fault message.

Bit 4 **"OFF2" message**

This indicates that an OFF2 command is present via the control word (bit 1).

Bit 5 **"OFF3" message**

Indicates that an OFF3 command is available and/or operating status OFF3 is available via the control word (bit 2).

Bit 6 **"Power-on inhibit" message**

This indicates that the system is in the POWER-ON INHIBIT operating status. The power supply, the open-loop and closed-loop control are operational. The signal is continuously available as long as there is an OFF2 command via the control word (bit 1) or an OFF3 command via the control word (bit 2) after the setpoint has been decreased, or an ON command if the OFF2- or OFF3 commands are simultaneously present.
If the signal is output at terminals, an L signal appears there for this signal.

Bit 7 **"Alarm" message**

This indicates that an alarm is present. If the alarm is output at terminals, an L signal appears there for this alarm message,.

Bit 8 **"Setpoint-actual value deviation" message**

This indicates the "setpoint-actual value deviation" alarm is present. This occurs as soon as the absolute value of the difference between the frequency setpoint and the frequency actual value is greater than or the same as a parameterizable deviation for a longer time than the monitoring time for the setpoint-actual value deviation (parameterizable deviation) time. The bit is again set to an H signal as soon as the absolute value of the difference between the frequency setpoint and the frequency actual value, is less than the deviation.

Bit 9 **"PZD control requested" message**

An H signal is always available as long as the system requests control from the automation system

Bit 10 **"Comparison frequency reached" message**

Indicates that the absolute frequency actual value is greater than or equal to the parameterized comparison frequency. The bit is reset to an L signal as soon as the absolute frequency actual value falls below the comparison frequency minus the parameterized comparison frequency hysteresis.
Parameters which can be set in FP-NRV1:

A232: P403	Comparison frequency
P401	Interval limit
P404	Hysteresis

Bit 11 **"Reserve changeover active" message**

Indicates that the reserve mode has been selected by the local key-operated switch

Bit 12 **Not assigned**

Bit 13 **Not assigned**

Bit 14 **Not assigned**

Bit 15 **Not assigned**

Response to faults

The response to faults can be parameterized by selecting the fault class for each fault.

Fault class 1

The unit is immediately shut down, the inverter pulses are inhibited; the circuit-breaker is opened; the system goes into the FAULT status (factory setting for all faults).

Fault class 2

The drive is ramped-down; the inverter pulses are inhibited; the circuit-breaker is opened; the system goes into the FAULT status.

The ramp for response to class 2 faults can be selected:

- standard down ramp
- or the ramp provided for fast stop

The sequences are described in more detail in the sequence diagrams in Section 5.3.2.

3.3 Actual value sensing

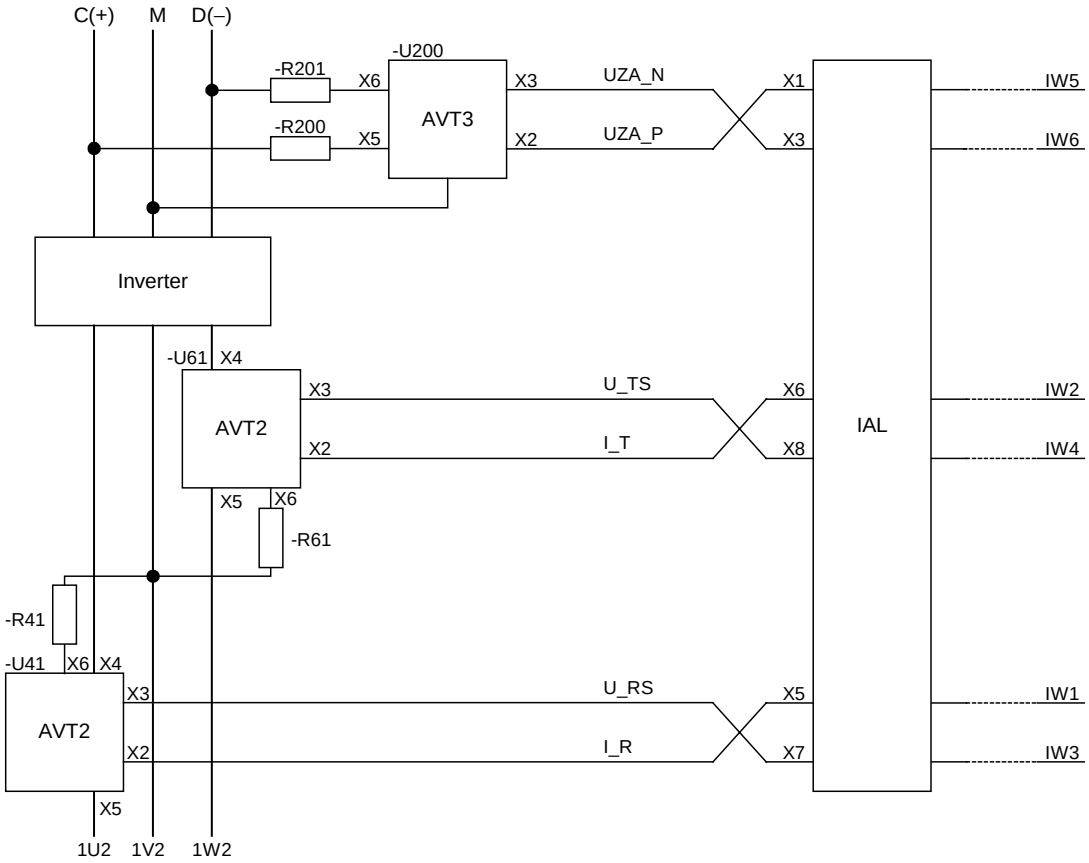

Fig. 3.2 Block diagram of the actual value sensing in DC link and converter output

Three CTs/PTs are used for the actual value sensing. The electronic shunts AVT2 (refer to the description, Section "electronic shunt AVT2") is inserted in the output circuit to sense the output currents and voltages. They measure the output currents i_R and i_T and the output voltages U_{RS} and U_{TS}. The voltage sensing AVT3 (refer to the description, Section "Voltage sensing AVT3") is bolted onto busbar M. It measures the positive (C) and the negative (D) DC link voltage.

All of the measured values are converted into serial optical signals, and transferred to the IAL module for evaluation via fiber-optic cable. The results are transferred to the digital SIMADYN D control system for further processing via the SUL- and ISL modules.

The block diagram shows the signal flow from sensing via twisted duplex fiber-optic cables at the IAL module. In the configuring, the measured values appear at the module connection IWE or IWE100, specified in the diagram, in function package TRV, at processor 2.

4 Start-up

Warning

When the equipment is operational, voltages exceeding 1000 V (medium voltage) are present. These voltages can result in death or severe bodily injury. Extreme care must be taken when working on the equipment. Therefore always observe the following warning information:

The following 5 safety rules, according to DIN VDE 0100, must always be observed before starting any type of work on the equipment:

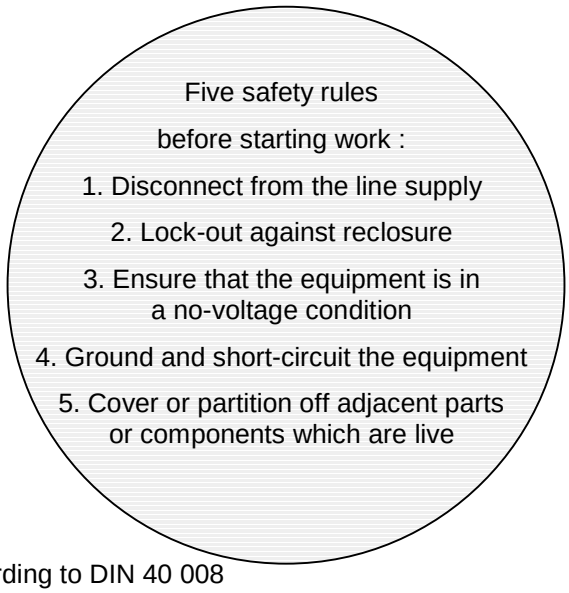

Safety label according to DIN 40 008

Only qualified personnel are permitted to work on the equipment or parts of it.
All work carried-out on the equipment and its installation and mounting must be in accordance with the national electrical regulations (in Germany, this is VBG4) and the relevant local regulations. The drive converter cabinet must be correctly grounded to ensure that no freely accessible part of the equipment is at a line supply potential or any other hazardous potential.
The user is responsible in ensuring that the motor, drive converter, transformer and other devices are installed and connected-up in accordance with recognized technical regulations of that particular country as well as any other regionally valid regulations. The dimensioning of the cables, fusing, grounding, shutdown, isolation and overcurrent protection are especially important.

The cabinet doors must always be closed when the drive converter is operational! The doors have limit switches, which immediately shutdown the drive converter (safety shutdown) if the doors are opened.
It is not permissible to **bypass or tamper** with the **door limit switches**!

Further, it is not permissible that objects are placed on the top roof assembly of the drive converter, as these could obstruct the pressure equalization flaps.

Please especially observe the following:

- Significant energy levels are saved in the drive converter DC link (capacitors).
- Hazardous voltages may be present in the drive converter for a somewhat longer time after the equipment has been shut down.
- The discharge time of the DC link capacitors down to non-hazardous voltage levels is less than 1 s as a result of the crowbar thyristor **(**always **check** that the DC link bus is **voltage-free** before touching it! Voltage can still be present as long as the motor is rotating, e.g. for fault trips).
- The voltage DC link can also be charged through other components. Before touching or coming into contact with live, components, it is **absolutely necessary** to check and ensure that they are in a **no-voltage condition**.
- Understand how the drive converter is connected into the power-on and power-off circuits.
- Please observe all of the information in this section and on the product itself.

If this information is not observed, death, severe bodily injury and significant material damage could result.

Caution

The electronic modules contact devices which can be destroyed by electrostatic discharge. These components can be easily destroyed if they are incorrectly handled. You should stand on an insulated (ESD compatible) surface, and ensure that it is not grounded before you carry-out any work on the equipment.

Qualified personnel

Only qualified personnel may be involved in the configuring, engineering, installation, start-up and operation of SIMOVERT MV drive converters and the open-loop and closed-loop control.

Note

It is assumed that personnel have been trained in the handling of the digital SIMADYN D control system.

The **STRUC-G** diagrams supplied with the equipment are **binding** for the function and start-up of the drive converter.

4.1 Recommended equipment for start-up

We recommend the following equipment for start-up:

No.	Type
1	Multimeter
2	High-voltage probe for the multimeter, 100 : 1 / 30 kV
1	Insulation measuring unit with 500/1000/2500/5000 V DC test voltage
1	Storage oscilloscope with plotter, min. 20 MHz
1	Clip-on ammeter with analog output for the oscilloscope; we recommend the HEME 1000
1	Rotating field measuring unit
1	Conductivity measuring unit to check the water before the cooling unit is filled (only for water-cooled drive converters)
1	Notebook
1	Connecting cable from the notebook to the CS7-X1 service interface
1	Calibrator 0 - 20 mA / 0 - 10 V
1	Software SIMADYN D IBS, program version 5.0
1	Anti-static equipment
-	Standard tool, measuring cables, voltage-divider probe for the oscilloscope etc.

4.2 Start-up steps

4.2.1 Configuration word

The drive converter type which is being used must be set using the KONFIG.X configuration word in the FP-IO. This is also used to define whether the Profibus interface is used.

Significance of KONFIG.X

Bit 0 : 0 with Profibus communications
1 without Profibus communications **(factory setting)**

Note
When using the Profibus interface, bit 0 must be set to 0!

Bit 1 : 0 Drive converter with air cooling

Bit 4 : 1 Sinusoidal filter

4.2.2 Checking the protective functions

The internal protective functions, door limit switches, installation monitoring, contact MM3 (A200-D03-X3), safety shutdown (door) must be checked. This is best realized by initiating the particular function and checking the shutdown (trip) on the display of the OP2 operator panel. Further, the protective functions can also be monitored via the LED display of the SUL. A high signal (LED is lit) which indicates that the function to be monitored is OK. The binary inputs and outputs of the SUL module are assigned as follows for the drive converter:

Binary input	LED	
BE 1	H5	fan (Q150, Q151, Q152, Q153), differential pressure monitoring (B80) and internal cabinet temperature monitoring A880
BE 2	H6	m.c.b.'s of the power supplies (F120, F130, F160) and SIMADYN-D power supply monitoring
BE 3	H7	SIMADYN-D power supply fans (A200-G1)
BE 4	H8	Safety circuit (safety shutdown (S10), door limit switches (S1 to S9), contact MM3 (A200-D03-X3), external safety trip)
BE 5	H9	Ground fault monitoring (B190)
BE 6	H10	GSV 55 V / 100 kHz (G90), m.c.b. Q90

Binary output	LED	
BA 1	H11	This issues a signal to start pre-charging. This signal is output from the IUU module in the SPV function package in the SIMADYN-D configured software.
BA 2	H12	Issues the enable signal, CLOSE circuit-breaker. This enable signal is dependent on the following conditions: The SUL power supply must be greater than 17 V to 19 V, the telegram data transfer to ISL must be OK (yellow LED), it is **not** permissible that the crowbar thyristor is ON, binary input 4 (safety circuit) must be high. If one of these conditions is not fulfilled, then the circuit-breaker CLOSE can only be re-enabled by removing the cause of the failure and ACKNOWLEDGING at the drive converter (LP or terminal strip).

4.2.3 Safety circuit

The drive converter is equipped with a safety circuit. The drive converter is fault tripped if this safety circuit is interrupted. It is sub-divided into an external and internal safety circuit (details, refer to Section 3.1.1).

The internal safety circuit includes:

- Safety pushbutton in the door (mushroom head pushbutton)
- Contact on the MM3 module in the SIMADYN D subrack
- Binary output 2 of the SUL module in the CCU subrack
- Door contact of the power cabinet
- Overpressure switch, filter capacitor -C10, -C11

The external safety loop can include, depending on the particular application case, enable signals or interlocking signals from options or system-specific signals. These are linked-in by removing the jumper X100:A16 - X100:C16 and connecting to these terminals.

4.2.4 Fault shutdown

Every fault shutdown causes the crowbar thyristor to be released and a message displayed on the OP2. The thyristors of the crowbar thyristor can only be controlled, if the DC link voltage has exceeded approx. 600 V.

Safety information

During operation, drive converters can have live, bare, and also moving or rotating parts as well as hot surfaces, corresponding to their degree of protection.

Severe personal injury or material damage can occur if the required covers are inadmissibly removed, if the equipment is incorrectly used or is incorrectly installed and handled.

Additional information is provided in the documentation.

Only qualified specialist personnel may be employed to transport, install and start-up (commission) and service the equipment (observe IEC 364 and CENELEC HD 384 or DIN VDE 0100 and IEC Report 664 or DIN VDE 0110 and the domestic accident prevention regulations).

In the sense of basic safety information, qualified specialist personnel are those personnel who have the training knowhow and qualifications to install, mount, commission and operate the equipment

The fault is displayed with a fault number and fault message text on the operator panel display. Refer to the Instruction Manual for troubleshooting and a description of the individual faults.

Insulation monitoring

An insulation monitoring function for the complete circuit is included it the converter.

Note

When a ground fault occurs, significant capacitive re-charging currents can flow as a result of the operating mode. These currents can result in subsequent damage.

We recommend that the power circuit of the SIMOVERT-MV drive converter is disconnected when a ground fault occurs.

4.2.5 Parameterization of the ON/OFF 1 command

The ON/OFF command can be output from various sources. It can be realized from the interface, from the operator panel, from the terminal strip or from a pushbutton in the door. The ON command should be switched high active from these sources; the commands for OFF1, OFF2 and OFF3 are always low-active (wire-breakage-proof), and connected in series. The individual OFF commands are negated in the SIMADYN D configured software. If OFF2 or OFF3 are used, the inputs in FP-IO

D30.X1 / P136 and D30.X2 / P137 for OFF2

D50.X1 / P138 and D50.X2 / P139 for OFF3

must be appropriately assigned: 1 = Profibus interface active
3 = Terminal strip active
4 = Profibus and terminal strip interface active

OFF3 can only be activated via the Profibus interface.

The connections are made via terminal strip X100 when selecting the "ON/OFF via terminal strip" function.

X100:33A/33C ON

X100:34A/34C OFF1

X100:35A/35C OFF2

The ON/OFF1 pushbutton in the door is only effective, if the key-actuated switch in the door is in the "Local" setting (refer to Section 4.2.7).
If the key-actuated switch is in the "Remote" setting, then terminal strip X100 must be selected as source for the ON/OFF1 command (factory setting).

The assignment of the source for the ON/OFF1 command can be modified by assigning D10.X1 / P134 ("Remote" setting of the key-actuated switch) or D10.X2 / P135 ("Local" setting of the key-actuated switch):

1 = Profibus DP interface

2 = Operator panel OP

3 = Terminal strip X100

4 = ON/OFF! using the switch in the door

In order to activate OFF1 via the Profibus interface, depending on the particular requirement, in addition, C138.I1 / P126 ("Remote" setting of the key-actuated switch) or C138.I2 / P127 ("Local" setting of the key-actuated switch) must be set to 1.

In order to activate OFF1 via the operator panel, depending on the particular requirement, in addition, C158.I1 / P130 ("Remote" setting of the key-actuated switch) and C158.I2 / P131 ("Local" setting of the key-actuated switch) must be set to 1.

4.2.6 Parameterizing the inverter enable

The inverter can be enabled from the interface, operator panel or terminal strip.

Factory setting:

Set the key-actuated switch into the "Remote" setting ⇒ the inverter is enabled via terminal strip X100:36A/36C using an H signal. If the key-actuated switch is in the "Local" setting, then the inverter is always enabled. The assignment can be changed as follows:

Parameter	Value range	Significance	Factory setting
P140, P141	1,2,3,4,5	1 = Interface 2 = Operator panel 3 = Terminal strip X100:A36/C36 4 = 1 / permanently enabled 5 = 0 / permanently inhibited	4

4.2.7 Changeover, remote/local control

SIMOVERT MV is equipped with a key-actuated switch, which is used to toggle between remote- and local control (pushbutton in the door, OP2 operator panel).

The status of the key-actuated switch is interrogated in the software. In the standard condition (the key-actuated switch is in the "Remote" setting), the "Basic" settings for the control signal and setpoint sources are active (also refer to Section 4.4). If the key-actuated switch is in the on position ("Local" setting), the "Standby" settings are active for the control signal- and setpoint sources.

In order that the key-actuated switch has the required function, the "Standby" setting of the control signal- and setpoint sources must be selected, so that the local control devices are active (pushbutton in the door, OP2 operator panel). This corresponds to the factory setting.

4.2.8 Parameterizing the circuit-breaker

Depending on the circuit-breaker, parameterization must be realized in the ULS function package. This function package is used to define whether the circuit-breaker is controlled using a pulse- or continuous signal. The pulse- and monitoring times are defined here. When testing, the circuit-breaker should be controlled without the system being connected to the main line supply; in this case, the pre-charging can be simultaneously tested (also refer to Section 4.2.9).

The circuit-breaker must be equipped with an undervoltage trip. This undervoltage trip ensures that the drive converter is shutdown, wire-breakage proof (fail safe). The drive converter processes the following signals:

- OPEN checkback signal from the circuit-breaker
- OPEN checkback signal, leading contact from the circuit-breaker
- CLOSE- and OPEN commands to the circuit-breaker

The signals are connected at terminal strip X100.

X100:A15/15C checkback signal, circuit-breaker OPEN

X100:A14/14C checkback signal, leading contact, circuit-breaker OPEN

Connector / parameter	Designation	Factory setting	Start-up setting
A80.I / P268	Select negation, checkback signal circuit-breaker OPEN	0	
B15.I / P269	Select, checkback signal circuit-breaker SW(0) / HW(1)	0	
B30.X / P274	Circuit-breaker monitoring, closing time	900 ms	
B40.X / P275	Circuit-breaker monitoring, opening time	900 ms	
B20.TRE / P270	Circuit-breaker inhibit time after CLOSE	100 ms	
B20.TRA / P271	Circuit-breaker inhibit time after OPEN	100 ms	
B20.TSE / P272	Circuit-breaker pulse time CLOSE	2 s	
B20.TSA / P273	Circuit-breaker pulse time, OPEN	2 s	
B50.I / P276	Select circuit-breaker CLOSE command, continuous/pulse signal	1	
B80.I / P278	Select circuit-breaker open command, continuous-/pulse signal	1	
B70.I / P277	Select negation, circuit-breaker CLOSE	0	
B100.I / P279	Select negation, circuit-breaker OPEN	0	
C50.I / P280	Select negation, checkback signal circuit-breaker, leading contact	1	
C70.I / P281	Select continuous/pulse signal checkback signal circuit-breaker, leading contact	0	

4.2.9 Testing the pre-charging via the pre-charging circuit

Before the pre-charging function is tested, the individual protective functions must have been completely checked. The auxiliary supply must be connected at the drive converter, and terminal strip X100. It is not permissible to connect the main supply at the circuit-breaker. The cabinet doors must remain closed.

Warning

The circuit-breaker must be locked-out so that it cannot be closed, and if necessary, the circuit-breaker should be withdrawn!

Safety instructions

During operation, drive converters can have live, bare, and also moving or rotating parts as well as hot surfaces, corresponding to their degree of protection.

Severe personal injury or material damage can occur if the required covers are inadmissibly removed, if the equipment is incorrectly used or is incorrectly installed and handled.

Additional information is provided in the documentation.

Only qualified specialist personnel may be employed to transport, install and start-up (commission) and service the equipment (observe IEC 364 and CENELEC HD 384 or DIN VDE 0100 and IEC Report 664 or DIN VDE 0110 and the domestic accident prevention regulations).

In the sense of basic safety information, qualified specialist personnel are those personnel who have the training knowhow and qualifications to install, mount, commission and operate the equipment.

The DC link is pre-charged after the auxiliaries have been switched-in and the appropriate checkback signals have been received. The auxiliaries are started after the ON command:

- for water-cooled drive converters, the cooling unit
- for air-cooled drive converters, the fans

The checkback signal of the external auxiliaries must be connected at terminal strip X100:45A/45C (only for water cooling). To test the pre-charging, at the first power-up, the limit for the "pre-charging OK" message in function package GRS at block M30.X2 must be set to approx. 30 % (do not save in the EEPROM!). If the limit is reduced, this results in the fact that pre-charging is only executed up to 30% of the rated DC link voltage. After this limit has been reached, as long as there is no fault present, the "CLOSE circuit-breaker" command is output. Thus, this test can only be executed, if the main supply is not connected at the circuit-breaker, otherwise the equipment could be damaged.

The DC link voltage can be visualized at the operator panel display (calling-up the DC link voltage actual value, refer to Section 5.2.5). If pre-charging was completed fault-free, another test should be made with the limit increased up to 80%. After an ON command, the DC link voltage will increase to 80% and this can be followed on the display. The CLOSE circuit-breaker command is output after the "pre-charging OK" message. However, as the main supply has still not been connected at this time, the DC link voltage will gradually decrease as a result of intrinsic discharge. This can be seen on the operator panel display. Pre-charging can be aborted at any time using an OFF command (door-mounted pushbutton), or using the safety off switch.

4.2.10 Testing the inverter without DC link voltage (simulation mode)

4.2.10.1 Preparatory measures

Warning

In order to prevent the DC link becoming live when in the simulation mode, the circuit-breaker must be locked-out so that it cannot be closed. If necessary, the circuit-breaker should be withdrawn!
Further, switch Q140 must be opened, so that the DC link cannot be pre-charged.
The DC link/inverter is still charged-up to approx. 100 V DC due to the power supply of the IGBT gating modules!

4.2.10.2 Simulation mode

The inverter can be operated via a setpoint generator block (refer to Section 4.2.10.3) in the function package TRV without a DC link voltage. Operation without DC link voltage, can, under fault conditions, be used to test the gating circuits of the IGBTs. An operating mode selection is necessary in order to implement this function. The selection is made in the WRS function package at block B60.X. Three different operating modes can be selected.

1. B60.X 2 Standard operation, Transvektor control active
2. B60.X 4 SWG without excitation, service
3. B60.X 5 SWG with excitation, service

The SWG operating mode without excitation is selected by entering a "4" at block B60.X. As the first test is made without DC link voltage, i.e. the power-on cascade with its checkback signal is missing, the inverter must be controlled directly via blocks S10.I2 (inverter enable) and S20.I8 (inverter inhibit) in function package EAL1.

Closed-loop controlled operation is selected, at block SWG, in function package TRV via connector SWG.IRM. A frequency setpoint can be input at connector X of block SWG50. The inverter is enabled via S10.I2 in FP-EAL1. The inverter now clocks the semiconductor devices. The inverter can be inhibited via S20.I8 in FP-EAL1. In this case, it should be observed, that the commands via connectors S10.I2 and S20.I8 represent a set- and a reset command. When the inverter enable is withdrawn, the inverter is not automatically inhibited.

Note

It is only permissible to enable the inverter via these two blocks for test purposes.

4.2.10.3 Handling the setpoint generator block SWG in function package TRV

Brief description of the most important input connectors

SWG.FNE	Nominal frequency in Hz
SWG.XFS	Frequency setpoint
SWG.XBU	Absolute voltage vector setpoint
SWG.XBI	Absolute current vector setpoint
SWG.KP	Proportional gain
SWG.TN	Integral action time in ms
SWG.ISM	Open-loop controlled operation
SWG.IFM	Hz proportional operation
SWG.IRM	Closed-loop controlled operation

Brief description of the most important output connectors

SWG.BU	Absolute voltage vector
SWG.FU	Voltage vector frequency
SWG.WU	Voltage vector angle

Open-loop controlled operation- ISM

SWG.ISM = 1

The frequency setpoint at connector XFS corresponds to the frequency of the voltage vector at output connector SWG.FU . The absolute value of the voltage vector setpoint at connector XBU corresponds to the absolute value of the voltage vector at output connector SWG.BU. It is not possible to enter a current setpoint. The closed-loop current control and therefore connectors SWG.KP and SWG.TN are not active (the frequency setpoint XFS refers to the value FME entered at SWG as well as at the MSZ block. Both connectors should have the same values.)

Frequency-proportional operation - IFM

SWG.IFM = 1

The frequency setpoint at connector XFS corresponds to the frequency of the voltage vector at output connector SWG.FU. The absolute value of the voltage vector at output connector SWG.BU is changed proportional to this. It is not possible to enter a setpoint at connector XBU and a current setpoint. The closed-loop current control and therefore connectors SWG.KP and SWG.TN are not active.

Closed-loop controlled operation - IRM

SWG.IRM = 1

The frequency setpoint at connector XFS corresponds to the frequency of the voltage vector at output connector SWG.FU. The absolute value of the voltage vector at the output connector BU is closed-loop controlled. The setpoint input at connector XBU is not active. It is possible to enter a current setpoint at connector SWG.XBI. The entered current setpoints refer to nominal shunt data. The controller parameters SWG.KP and SWG.TN are active.

If the drive converter is shutdown with a fault during setpoint generator operation, a sequence must be maintained to re-enable the setpoint generator.

Acknowledge fault - cancel mode - enable inverter - inhibit inverter

SWG operation is now possible by re-selecting the mode and then enabling the inverter.

4.2.11 Testing pre-charging with the main supply connected

The limit for the "pre-charging OK" (block M30.X2 in the FP-GRS) message must be set to 80%. The checkback signal from the external auxiliaries must be connected at terminal strip X100 : A45 / C45. The circuit-breaker is connected with the main supply. The auxiliaries are powered-up after the ON command. The checkback signals are evaluated and the pre-charging relay is switched-in. After 80% of the rated DC link voltage has been reached, the command to CLOSE the circuit-breaker is output. The system monitors that the circuit-breaker checkback signal is received. From now onwards, the DC link is no longer fed via the pre-charging circuit, but through the incoming rectifier. As long as the inverter is not enabled, the drive converter is in the ready status with the rated DC link voltage available. The pre-charging or ready status can be aborted at any time with an OFF command (door-mounted pushbutton) or using the safety off switch (mushroom head pushbutton in the door).

4.2.12 Testing the inverter without connected load at the rated DC link voltage

The inverter can be operated via a setpoint generator block in function package TRV (refer to Section 4.2.10.3). Operation without a connected load, can be used, under a fault condition to test the gating circuits and the IGBTs. In this case, an operating mode must be selected. This selection is made in function package WRS at block B60.X. For simulation purposes, the inverter can be operated in three different modes via block SWG in function package TRV.

1. B60.X 2 Standard operation, Transvektor control active
2. B60.X 4 SWG without excitation, service
3. B60.X 5 SWG with excitation, service

Operating mode SWG without energization is selected by entering a “4” at block B60.X. The inverter is enabled via the selected source in function package IO at block D70.X1.

Closed-loop controlled operation is selected at block SWG in function package TRV via connector SWG.IRM. The frequency setpoint of the voltage vector can be entered at connector SWG50.X. The absolute value of the voltage vector is closed-loop controlled. A current setpoint can be entered at connector SWG50.X. The entered current setpoints refer to the nominal shunt data. The SWG.KP and SWG.TN controller parameters are active. The ON command is entered via the selected source FP IO D10. The auxiliaries are controlled. As soon as the checkback signals from the auxiliaries have been evaluated, pre-charging is executed. The CLOSE command is output to the circuit-breaker with the pre-charging OK message. The drive converter is now in the ready condition. The inverter is enabled using the selected source FP IO D70. The inverter now clocks the semiconductor devices. The inverter is automatically inhibited when the inverter enable is withdrawn.

4.3 Parameterizing the Transvektor closed-loop control

4.3.1 Determining the parameter data

The following are required to parameterize the closed-loop control:

1. Motor rating plate data
2. Motor equivalent circuit diagram data
3. Motor no-load characteristic
4. Rating plate data of the SIMOVERT MV
5. Speed encoder data

1. Motor rating plate data

Rating plate data *(example)*

P_N 2600 kW	$\cos\varphi_N$ 0.85
U_N 3300 V	f_N 50 Hz
I_N 553 A	n_N 995 RPM
I_0 176 A	

The following values are determined from the motor rating plate data and are entered at the DP block in function package TRV:

				6 kV	6,6 kV
P604	DP.RCM		**RCM**	$= I_N * 2{,}61$	$= I_N * 2{,}87$
P603	DP.RVM		**RVM**	$= U_N / 2{,}61$	$= U_N / 2{,}87$
P605	DP.CFN	$= \cos \varphi_N$	**CFN**	Nominal power factor [-]	(0.85)
P606	DP.RSM	$= n_N$	**RSM**	Rated motor speed [RPM]	(995 RPM)
P607	DP.RFM	$= f_N$	**RFM**	Rated motor frequency [Hz]	(50 Hz)
P622	DP.PP	= Motor pole pair number			(3)

2. Data from the motor equivalent circuit diagram

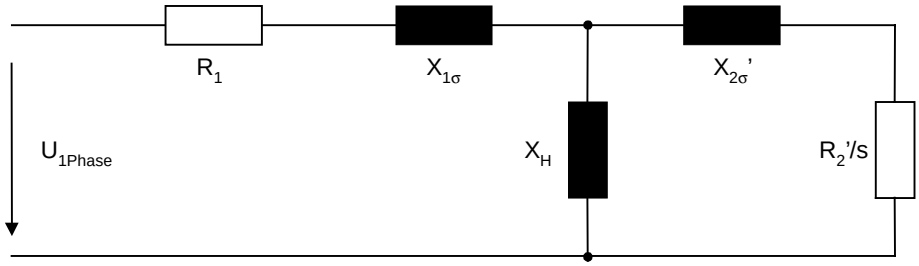

Reference impedance Z_N = 3.445 Ω/phase

R_1 (at f = f_N)	=	0.0064 p.u.
$X_{1\sigma}$ (at s = 0)	=	0.1280 p.u.
X_H (at s = 1)	=	4.407 p.u.
$X_{2\sigma}$' (at s = 0)	=	0.1231 p.u.
R_2' (at s = 0)	=	0.0052 p.u.

The following values are determined from the motor rating plate data, and are entered at the DP block in function package TVR:

P610	DP.R1S	=	R_1 for f = f_N	**R1S**	Stator resistance [p.u.]	(0.0064 p.u.)
P612	DP.X1S	=	$X_{1\sigma}$ for s ≈ 0	**X1S**	Stator leakage reactance [p.u.]	(0.1280 p.u.)
P614	DP.XUD	=	Non-saturated X_H for s = 1	**XUD**	Magnetizing reactance, non-saturated in the d axis [p.u.]	(4.407 p.u.)
P615	DP.XUQ	=	Non-saturated X_H for s = 1	**XQU**	Magnetizing reactance, non-saturated in the q axis [p.u.]	(4.407 p.u.)
P616	DP.XHD	=	I_0/I_N	**XHD**	Magnetizing reactance, saturated in the d axis [p.u.]	(0.3183)
P617	DP.XHQ	=	I_0/I_N	**XHQ**	Magnetizing reactance, saturated in the q axis [p.u.]	(0.3183)
P618	DP.R2D	=	R_2' for s = 0	**R2D**	Rotor resistance in the d axis [p.u.]	(0.0052 p.u.)
P619	DP.R2Q	=	R_2' for s = 0	**R2Q**	Rotor resistance in the q axis [p.u.]	(0.0052 p.u.)
P620	DP.X2D	=	$X_{2\sigma}'$ for s ≈ 0	**X2D**	rotor leakage reactance in the d axis [p.u.]	(0.1231 p.u.)
P621	DP.X2Q	=	$X_{2\sigma}'$ for s ≈ 0	**X2D**	rotor leakage reactance in the d axis [p.u.]	(0.1231 p.u.)

Settings for asynchronous motors:

For values, which have to be set in d- and q axis, normally the same value is taken.

3. Motor no-load characteristic

The no-load characteristic values can be taken from the motor data sheet.

Example:

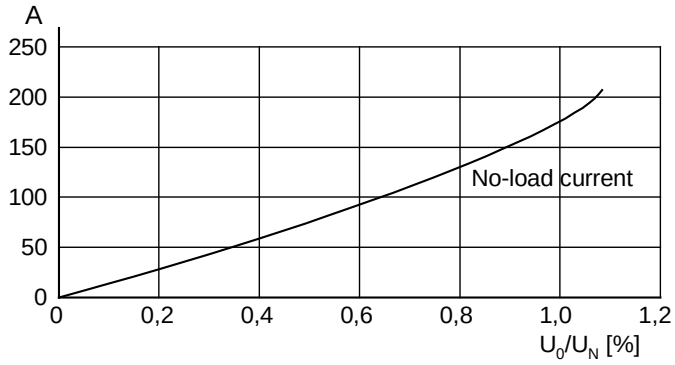

i3 = 1.0 (176 A) u3 = 1.0

i2 = 0.71 (125 A) u2 = 0.8

i1 = 0.48 (85 A) u1 = 0.6

The values which have been determined, are entered at the IMU block in function package TRV.

P740	IMU.U1	= u1	**U1**	Coefficient of the magnetizing characteristic for the per unit induced voltage
P743	IMU.S1	= i1	**S1**	Coefficient of the magnetizing characteristic for the per unit magnetizing current
P741	IMU.U2	= u2	**U2**	Coefficient of the magnetizing characteristic for the per unit induced voltage
P744	IMU.S2	= i2	**S2**	Coefficient of the magnetizing characteristic for the per unit magnetizing current
P742	IMU.U3	= u3	**U3**	Coefficient of the magnetizing characteristic for the per unit induced voltage
P745	IMU.S3	= i3	**S3**	Coefficient of the magnetizing characteristic for the per unit magnetizing current

If there is no motor data sheet, and field-weakening is not required, then no adaptation is required.

The characteristic is linear with the factory setting:

P740 = P743 = #0,4

P741 = P744 = #0,6

P742 = P745 = #1,0

4. Drive converter rating plate

The following values are determined from the drive converter rating plate, and are entered at the DP block in function package TRV:

P609	DP.UDI	**UDI**	Rated DC link voltage [V]
P608	DP.FMX	**FMX**	Maximum output frequency [Hz]

5. IHV filter data

Drive converter Order No. [MLFB]	Filter inductance L_f [H]	Ohmic resistance of the filter R_f [Ω]
6SE8008-1DA00	0.00352	0.064
6SE8010-1DA00	0.00176	0.0427
6SE8012-1DA00	0.00176	0.0427
6SE8014-1DA00	0.0012	0.0336
6SE8015-1DA00	0.0012	0.0336
6SE8018-1DA00	0.0088	0.0277
6SE8020-1DA00	0.0088	0.0277
6SE8008-1EA00	0.00352	0.064
6SE8010-1EA00	0.00176	0.0427
6SE8012-1EA00	0.00176	0.0427
6SE8014-1EA00	0.0012	0.0336
6SE8015-1EA00	0.0012	0.0336
6SE8018-1EA00	0.0088	0.0277
6SE8020-1EA00	0.0088	0.0277

Calculating the inductive resistance with motor frequency f_N and the reference reactance Z_B:

$$X_F = 2 * \pi * f_N * L_F$$

$$Z_B = \frac{V_N}{\sqrt{3} * I_N * 6.81} \quad \text{for } V_N = 6\ \text{kV}$$

$$Z_B = \frac{V_N}{\sqrt{3} * I_N * 8.23} \quad \text{for } V_N = 6.6\ \text{kV}$$

Calculating the per unit inductive resistance:

$$x_f = \frac{X_F}{Z_B} \qquad r_f = \frac{R_F}{Z_B}$$

Cable reactance and cable resistance:

The stray reactance L_L and the resistances R_L should be derived from the cable lengths and converted with the rated motor frequency.

$$x_l = \frac{2 * \pi * f_N * \sqrt{3} * I_N}{V_N}$$

$$r_l = \frac{R_L * \sqrt{3} * I_N}{V_N}$$

Determining the total leakage reactances and leakage resistances from the filter and cable:

P611 DP.R1L $r_f + r_l$

P613 DP.X1L $x_f + x_l$

6. Speed encoder data

At the DP block in function package TVR the pulse number per revolution is entered:

P530 DP.PPR Pulse number per revolution

4.3.2 Changing over to setpoint generator operation

Setpoint generator operation can only be implemented without the motor connected or with the motor mechanically de-coupled from the load.

Changeover to setpoint generator operation

1. The drive converter must be powered-down.
2. Set B60.X / P432 to 4 in the FP-WRS.
3. Set SWG.IRM / P872 to 1 in the FP-TRV.
4. Enter 0 % setpoint at SWG30.X (FP-TRV).
5. Enter 0 % frequency setpoint at SWG50.X (FP-TRV).
6. Power-up the drive converter, enable the inverter.
7. Enter the current setpoint, e.g. 30 % at SWG30.X.
8. Enter the frequency setpoint, e.g. 10 % at SWG50.X.

Re-establish the original settings (undo the changes) after you have completed this operation (inverse sequence).

4.3.3 Checking the actual values

In order to be able to check the actual values, the closed-loop control must be changed-over into setpoint generator operation (refer to Section 4.3.2). The current actual values I_A and I_B can be tapped at the interface module -A132 (SU11), terminals X2:3/4 and X2:5/6. In this case, in FP-TRC, the connector AUSW.IF must be set to a logical 1, and in FP-TRV, the connector THEN27.IF must be set to a logical 0. The currents I_A and I_B should be connected to an oscilloscope in the X-Y display mode. Only a circle should be seen on the oscilloscope. At lower speeds, the display may rotate in a counter-clockwise direction.

4.3.4 Checking the angular offset

In order to be able to check the angular offset, the closed-loop control must be changed-over into setpoint generator operation (refer to Section 4.3.2). Refer to Section 4.3.3 when enabling the analog outputs.

The following settings should be made in the FP-TRV:

- Connect KPW1.GW to S4.X1. Connect the oscilloscope, channel 1 at -A132 terminals X2:7 and X2:8.
- Connect KPW2.GW to S5.X1. Connect the oscilloscope, channel 2 to -A132 terminals X2:9 and X2:10.

Set the gain factors DA4.SF and DA5.SF to #3.15.

This then allows the angle of the voltage vector and the current vector to be displayed on the oscilloscope as sawtooth signals (0 V ≙ 0 and 10 V ≙ value at 2π). The following is displayed for a clockwise rotating field:

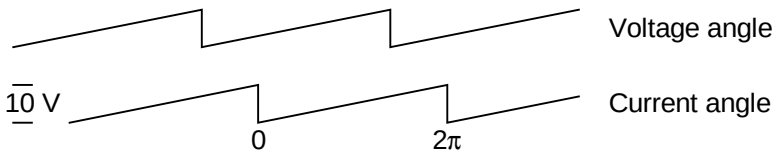

At a constant speed, the sawtooth must increase with a constant gradient between 0 and 2π. Signal noise and disturbances (jumps upwards or downwards) indicate that the signal sensing is faulty (hardware problem).

The voltage vector angle must lead the current vector angle by 90° when the motor is in a no-load condition.

4.3.5 Checking the speed sensing (operation with encoder)

In order to check the speed sensing, the closed-loop control must be changed-over into the setpoint encoder mode (refer to Section 4.3.2). Values can be output from the FP-TRV. In this case, a frequency setpoint (e.g. 2 Hz) must be entered.
In order to check the speed sensing, the electrical and the mechanical angles must be prepared. The values from FG.YP (mechanical angle 0 ⇒ 1 signifies clockwise rotation, 0 ⇒ –1 signifies counter-clockwise rotation) and LWA.WLS (electrical angle) should be output, normalized to π, at analog outputs (Output refer to Section 4.3.3 and Section 4.3.4) (the angle runs from 0 ⇒ 2π). These two angles must fulfill the following condition: LWA.WLS = DP.PP * FG.YP, whereby DP.PP corresponds to the pole pair number. In the following, the mechanical frequency must be compared with the electrical frequency. This can be realized via the Telemaster. The actual values can be read at the blocks FG.Y ($f_{mechanical}$) and WFA.FLS ($f_{electrical}$) in function package TRV. The values which have been read should be approximately numerically the same as those of the frequency setpoint. Different frequency setpoints must be used when checking.

4.3.6 Checking the closed-loop control settings (ASM)

Recommendation for the Telemaster macro

IMU.PSS	Flux setpoint in the EMF normalization after saturation evaluation
UMOD.PUM	Absolute rotor flux from the voltage model
IMOA.PIM	Absolute rotor flux from the current model
IAK.Y3	Current actual value α component
IAK.Y4	Current actual value β component
VOR.MS	Torque setpoint
WFA.WDG	Smoothed angular difference
ISR.DU1	Reference voltage component from the current controller in the φ1 axis
ISR.DU2	Reference voltage component from the current controller in the φ2 axis
ISQ.DU	Quadrature branch in the reference voltage component, φ1 axis
ISR.KPG	Gain of the quadrature axis which is implemented below the voltage limiting
UTR100.UBG	Limited absolute value reference voltage
UTR100.AS	Reference modulation level, limited
IMU.I1V	Reference magnetizing current with dynamic component to pre-control the model flux controller
KPW1.YB	(IWV) absolute value of the corrected current voltage actual
WFA.FLS	Rotor rotating frequency

Prerequisites:

- Transvektor control (set B60.X / P432 in FP-WRS to 2)
- The motor is de-coupled
- The drive converter is powered-down

The following connectors are included in the FP-TRV. The sequence must be maintained.

1. In order to optimize the pre-control, de-activate the quadrature arm with ISQ.ENQ / P815 = 0
2. Set ISR.NA2 / P809 to 2.2
3. Set ISR.NA1 / P808 to 2.08

The current controller is then fully activated in the φ1 axis.

4. Power-up the drive converter and, for example, run-up to 25 Hz
5. Compare the flux setpoint IMV.PSS with the flux actual values of the voltage model UMOD.PUM and the current model IMOA.PIM. The following relationships should be fulfilled:
   UMOD.PUM $\geq$ IMU.PSS, approx. + 2 - 3 %
   IMOA.PIM $\leq$ IMU.PSS, approx. – 2 - 3 %
   Example: IMU.PSS = 94 %, UMOD.PUM = 97 %, IMOA.PIM = 91 %
   The values should be checked at various frequency setpoints. They should be approximately constant up to the motor rated frequency.
6. Check the motor voltage actual values KPW1.YB at half the rated frequency and at the rated motor frequency. Approximately 47 % or 95 % respectively, should be displayed.

7. Check the current controller outputs ISR.DU1 ISR.DU2. If the pre-control is correct, the outputs are close to 0.
   If required, the pre-control can be appropriately adapted at connectors VOR.EEK / P796.
8. Power-down the drive converter.
9. Re-enable the quadrature arm (ISQ.ENQ / P815 = 1). Check the output ISQ.KPG. It should be in the range between 5 and 10 (preferably closer to 5). The gain can be corrected via ISQ.EKG / P814. Appropriately adapt ISQ.EKU / P813. Check at the output ISQ.KPU.
10. Power-up the drive converter.
    Again, check ISR.DU1 and ISR.DU2 at various frequency setpoints. The two values should also be close to 0. Further, check the flux setpoint, flux actual values and the motor voltage.
11. Power-down the drive converter.

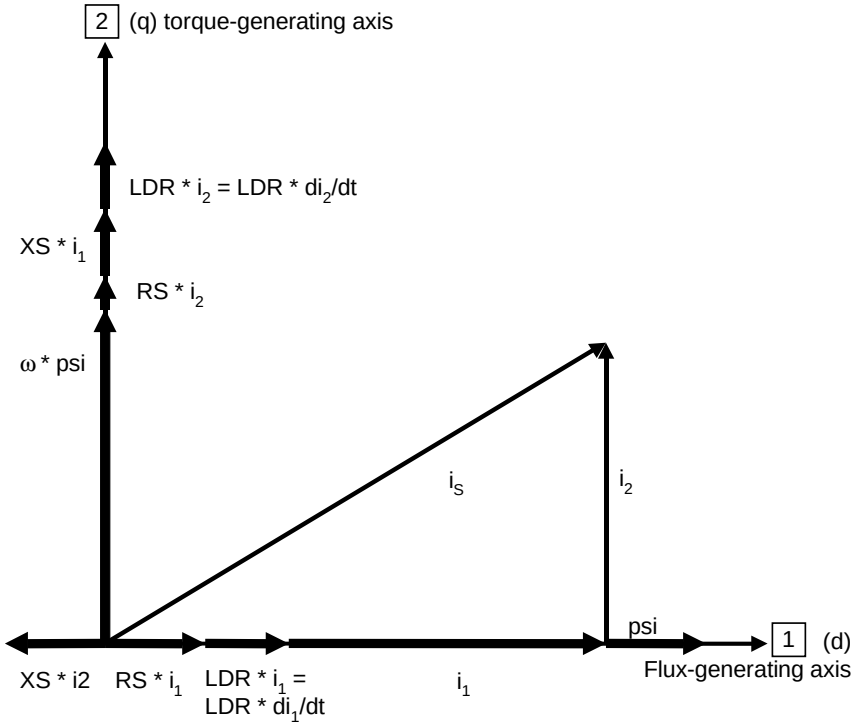

Current- and voltage components

U1S (d axis) = $RS * ERD * i_1 - XS * EXQ * i_2 + LDQ * ELD * di_1$

U2S (q axis) = $RS * ERQ * i_2 + XS * EXD * i_1 + LDQ * ELQ * di_2 + 2\pi f * psi * EEK$

Adaption factors of the pre-control block VOR (FP-TRV):

ERD	setting factor, total stator resistance in d axis
EXQ	setting factor, total leakage reactance in the q axis
ELD	setting factor, total leakage inductance in the d axis
ERQ	setting factor, total stator resistance in the q axis
EXD	setting factor, total leakage reactance in the d axis
ELQ	setting factor, total leakage inductance in the q axis
EEK	setting factor, EMF

4.3.7 Operation without speed encoder

For encoderless operation, there is no measuring equipment for the speed, and this is why an artificial speed actual value is used, which is calculated from the rotating frequency of the motor.

The controlled operating range therefore does not include n = 0 (zero speed) but is only possible from a minimum frequency; the drive goes into the open-loop controlled operating mode below this frequency:

Counter-clockwise rotation

Open-loop controlled operation	0 to –8 %
Closed-loop controlled operation	–8 % up to maximum speed, counter-clockwise

Clockwise direction of rotation

Open-loop controlled operation	0 to 8 %
Closed-loop controlled operation	8 % to maximum clockwise speed

The percentage refers to the rated motor frequency, which is set to 100 %. The maximum frequency, clockwise and counter-clockwise is limited by the permissible drive frequency; it may never exceed the permissible drive converter output frequency.

Criteria for good operating characteristics

The ramp-function generator is set, so that the drive can follow the ramp without any following error.

At the transition from the open-loop controlled into the closed-loop controlled operating range, the speed controller shouldn't generate any steps.

The voltage model flux should not manifest any amplitude changes > 10 % during setting process! The frequency actual value must be smoothed.

Parameterization

Note

Encoderless operation is pre-fed in the factory. Speed-controlled with encoder has to be set using P602 = 0 (2.TRV.DP.FRE).

P602 = 1 (2.TRV.DP.FRE) enable encoderless operation

P391 = 1 (1.NRV1.C20.I1) enable acceleration pre-control

If, the required acceleration time should be so low for closed-loop controlled operation, that breakaway is difficult, then the ramp gradient must be limited in the open-loop controlled operating range using P355 (1.SWK.H14.X2). Setting range: 5 s - 3600 s.

The acceleration pre-control is calibrated at P358 (1.SWK.H200.X2) so that when the drive accelerates uncoupled (uncoupled from the load) the integral component of the speed controller remains extremely low (ideally, approximately zero).

When the drive is loaded (the load is known) the load torque can be pre-controlled statically in order to support acceleration at P390 (1.NRV1.C70.X2). Setting range: 0 - 150 %. The pre-control is disabled for f > 8 % (or f < –8 %) as the speed controller is then fully operational.

As secondary measure, the machine flux can be boosted in the open-loop controlled operating range. The percentage value by which the flux is increased in the frequency range –8 % < f < 8 % is entered as percentage at P748 (2.TRV.IMU.PSE). Setting range: 0 - 50 %.

This increase is automatically withdrawn.

As the speed is not measured, but is calculated in a motor model, the signal must be smoothed and its dynamic characteristics possibly corrected.

Parameters P784 and P785 are only effective for P602 = 1.

P784 (2.TRV.WFA.TGF) smoothing frequency, setting in ms.

P785 (2.TRV.WFA.TGA) setting of the dynamic performance in ms. This is only necessary for extremely low ramp-up times < 500 ms and is realized, so that no steps are manifested in the actual value.

4.3.8 Operating the drive converter under load

4.3.8.1 Adapting the torque limits

The source for the motor limit when motoring, is selected using F78.X1 / P366 in the FP-SWK via F78.X1 / P366 or F78.X2 / P367.

Significance of F78.X1 and F78.X2

1 Technological setpoint 2
2 Technological setpoint 3
3 Operator panel
9 Fixed 50 % (F72.X1 / P364) (factory setting)
10 Dependent on the speed, can be set via polygon characteristic F76
11 Analog setpoint 1
12 Analog setpoint 2
13 Analog setpoint 3
14 Interface, word 5
15 Interface, word 6
16 Technological setpoint 1

The source for the torque limit when generating is adapted using F88.X1 / P368 and F88.X2 / P369 depending on the setting of the key-actuated switch.

Significance of F88.X1 and F88.X2

3 Adaption is realized dependent on the speed via the permissible rating of the pulsed resistor PWg-max (F86.X1)
9 Fixed, 50 % (F72.X1 / P365)

The other values correspond to the sources for the torque limit when motoring. The motor limits must be set corresponding to the plant situation (motor, load etc.).

Note

The limit values when generating must be entered as negative values (–).

4.3.8.2 Adapting the ramp-up- and ramp-down times

The ramp-up- and ramp-down times are adapted according to the plant conditions. The minimum ramp-up time can be set at H19.LL / P350 in the FP-SWK; the minimum ramp-down time at H39.LL / P352. The ramp-up/ramp-down time is set at the operator panel.

4.3.8.3 Setting the fast stop ramp

The fast stop ramp (OFF3) is set via H40.X2 / P353 in the FP-SWK.

4.3.8.4 Setting the maximum and minimum speed

The maximum and minimum speed setting (frequency) is realized via the operator control panel.

Clockwise direction of rotation:

Values between 0 and C60.LL / P340

Counter-clockwise rotating field:

Values between 0 and C70.LL / P341

4.3.8.5 Speed controller setting

The speed controller is adapted according to the load conditions. The setpoint source for the gain is set using N300.X1 / P396 or N300.X2 / P397 in the FP-NRV1 depending on the setting of the key-actuated switch.

Significance

1 Fixed setting at N310.X1 (factory setting)
2 Analog setpoint 3
3 Interface, word 5
4 Interface, word 6
5 Technological setpoint 2
6 Technological setpoint 3

The gain can be adapted using N320.X2 / P398. The integral action time of the speed controller can be set at N100.TN / P399 (FP-NRV).

4.3.8.6 Setting the closed-loop current control and switching frequency

P800	2.TRV.ISR10.X1	0.2
P816	2.TRV.ISQ.NQG	0.4
P847	2.TRV.ST50.FSC	800

4.3.8.7 Checking the motor flux and -voltage

Checking the motor flux and -voltage when the drive is under load

The IMOA.PIM and UMOD.PUM values in the FP-TRV, when the drive is under load (optimum at the rated torque), should approximately correspond to the values when the motor is running under no-load conditions (± 2 - 3 %). The influence of the load on the voltage model flux can be minimized in operation using UMOD.EXS / P770.

Checking the motor voltage KPW1.YB

The value should increase from approx. 97 % under no-load conditions to approx. 100 % at rated speed and rated torque.

4.4 Overview of the software

The drive is parameterized using the start-up program of the SIMADYN Telemaster. It is connected at the interface of module CS7, connector X01.

The parameters are summarized in the parameter list.
The STRUC G diagrams, supplied with the documentation are exclusively binding.

4.4.1 FP-IO

This function package includes:

- Signal inputs (SUL, IT41, SS - L2DP)
- Basic/standby changeover for command and setpoint sources
- Enabling the sources for the OFF1 command
- Assignment of the sources for control words 1 and 2
- Assignment of the checkback signals
  (transformer, circuit-breaker, motor and cooling unit)
- Error- and alarm messages from the FP IO

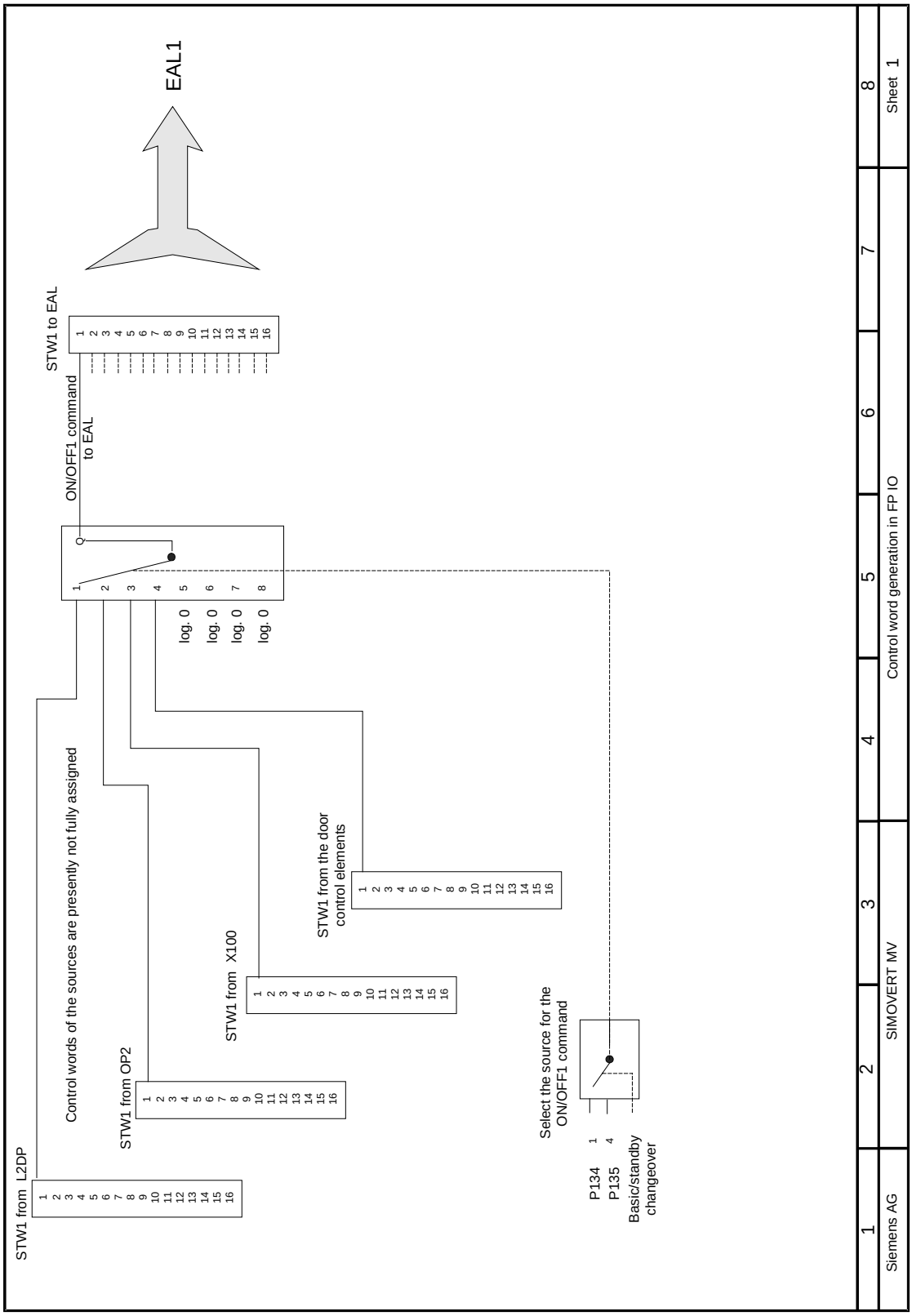

Fig. 4.1 Control word generation in the function package

4.4.2 FP-KOM1

This function package includes:

- Assignment of the actual values to the corresponding PZD
- Normalization and smoothing of the received actual values

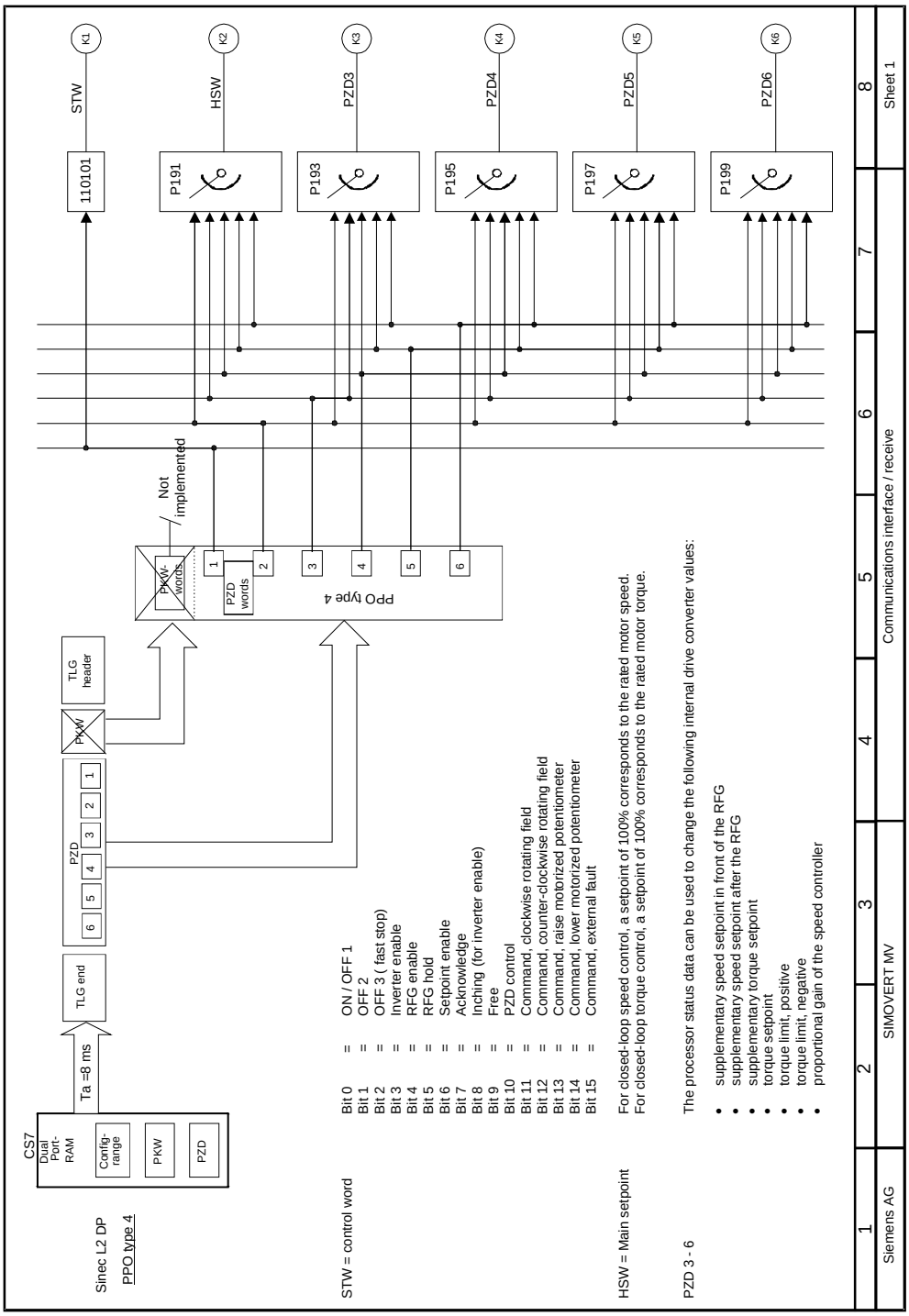

Fig. 4.2 Automation interface (Sheet 1)

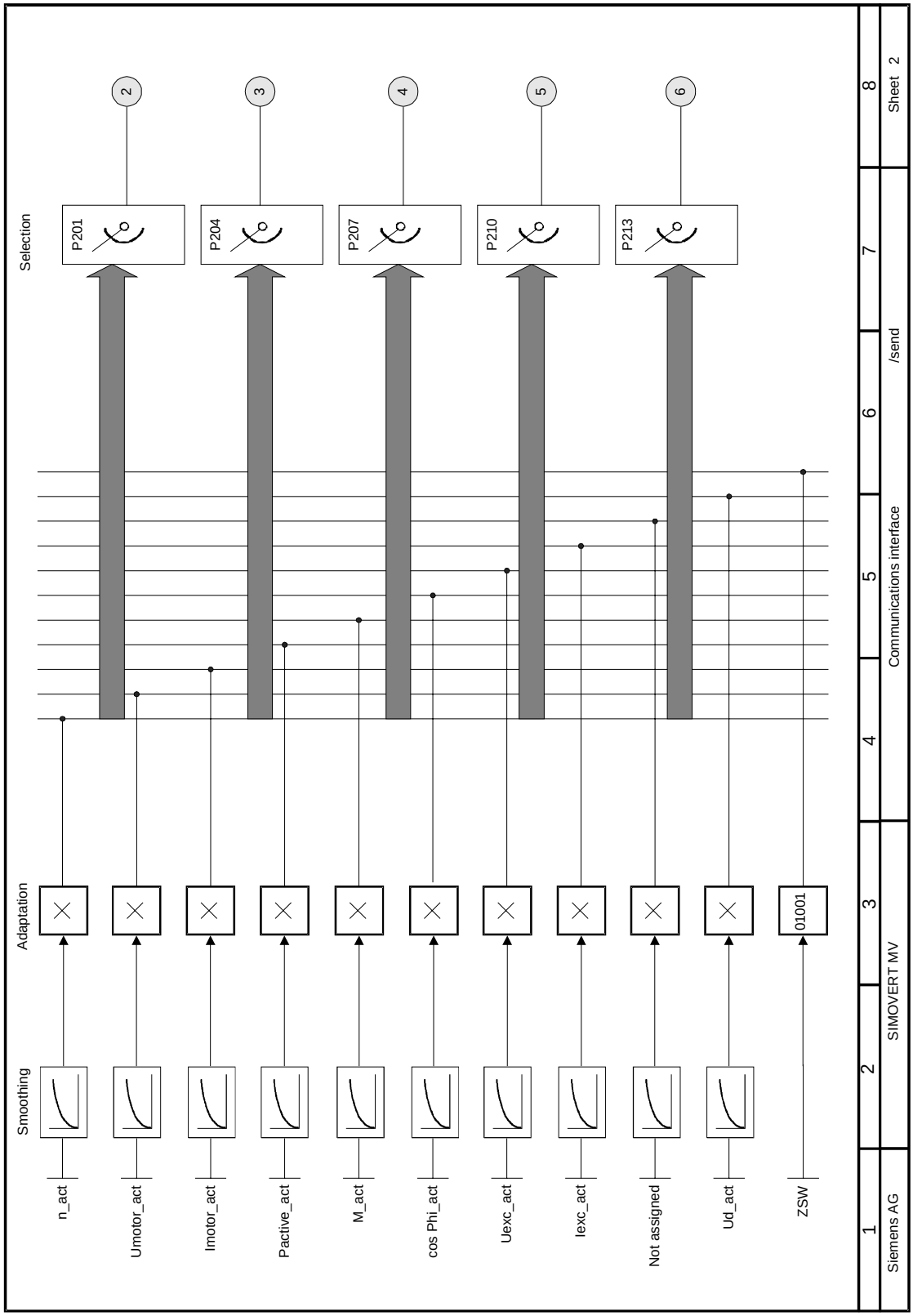

Fig. 4.3 Automation interface (Sheet 2)

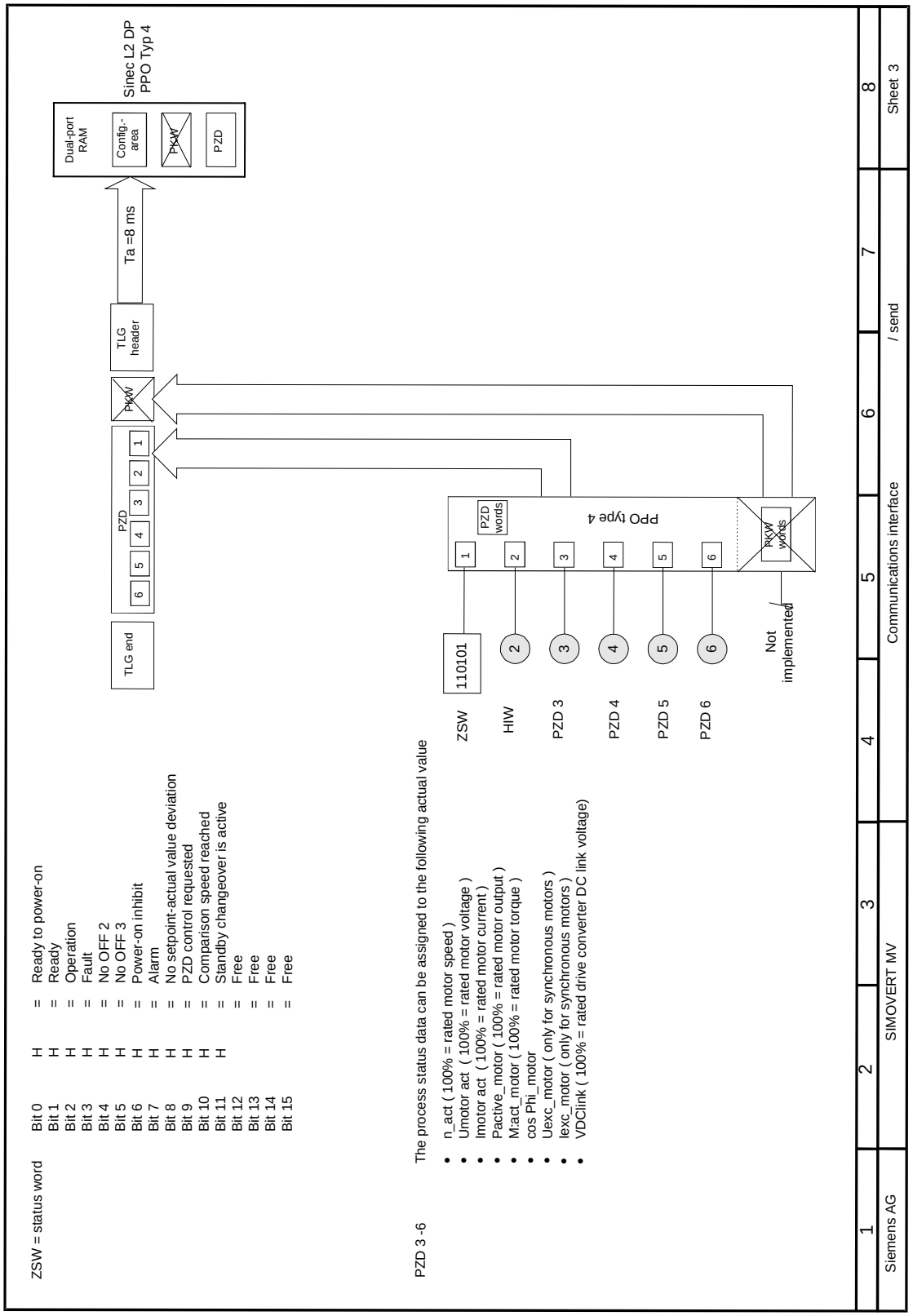

Fig. 4.4 Automation interface (Sheet 3)

4.4.3 FP-GRS

This function package includes:

- Monitoring the DC link pre-charging and discharge
- Fault/error messages from the FP GRS

4.4.4 FP-EAL1

This function package includes:

- Power-on/power-off logic
- Evaluation of the drive converter statuses
- Sequence for ON, OFF1, OFF2, OFF3
- Monitoring times for the DC link
- Monitoring- and delay times for the transformer and motor
- Monitoring, auxiliaries
- Fault and alarm messages from the FP EAL1

The power-on and power-off sequences are described in more detail in Section 5.3.

4.4.5 FP-ULS

This function package includes:

- Parameterization of the circuit-breaker
- Monitoring- and interlocking functions of the circuit-breaker
- Fault messages from the FP ULS

4.4.6 FP-SWK

This function package includes:

- Parameterization of the maximum and minimum speeds
- Parameterization of the fixed setpoints, including setpoint
- Parameterization of suppression bandwidth 1 and 2
- Selection of the setpoint sources
- Parameterization of the ramp-function generator
- Fault messages from the FP SWK

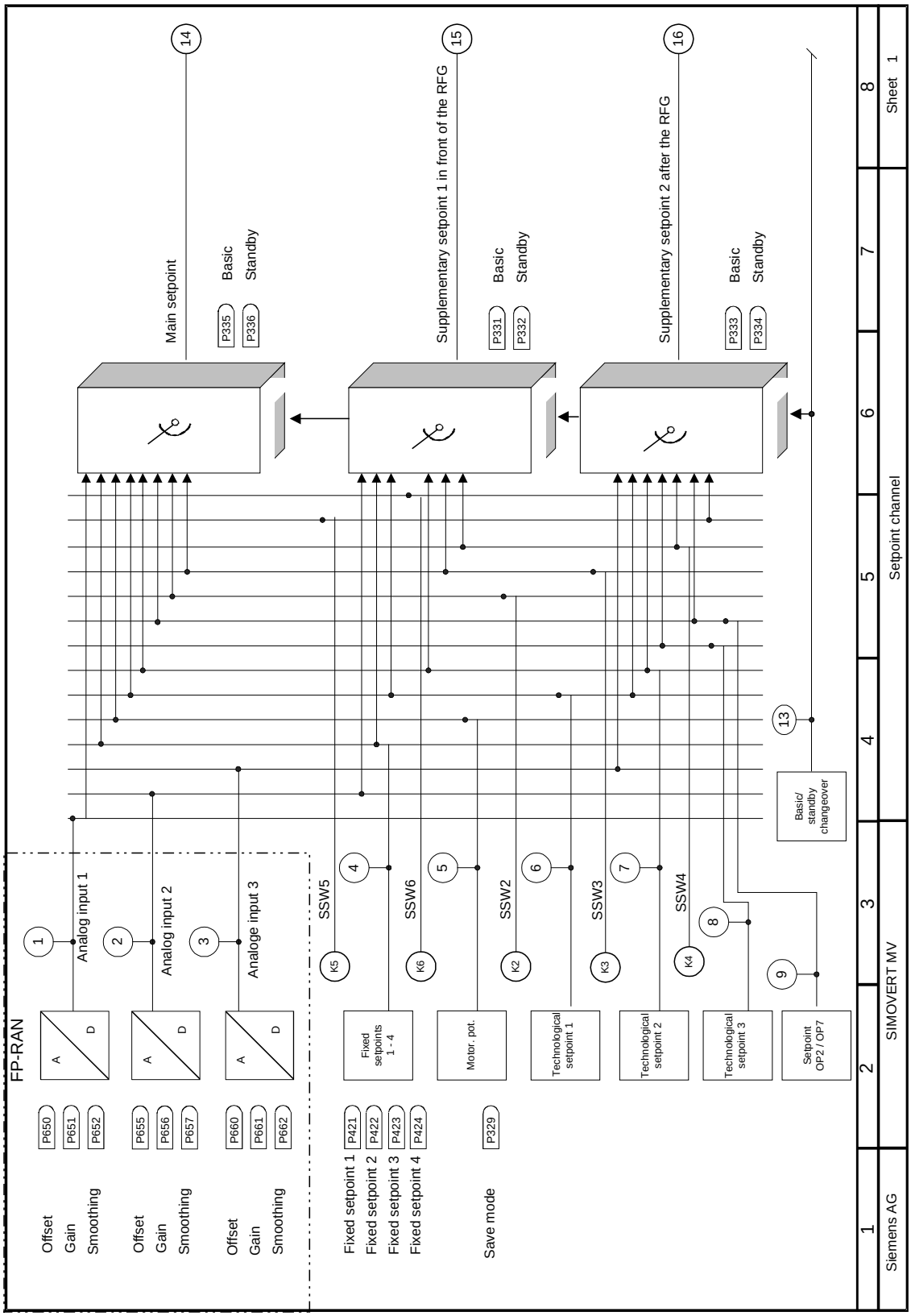

Fig. 4.5 Setpoint channel (Sheet 1)

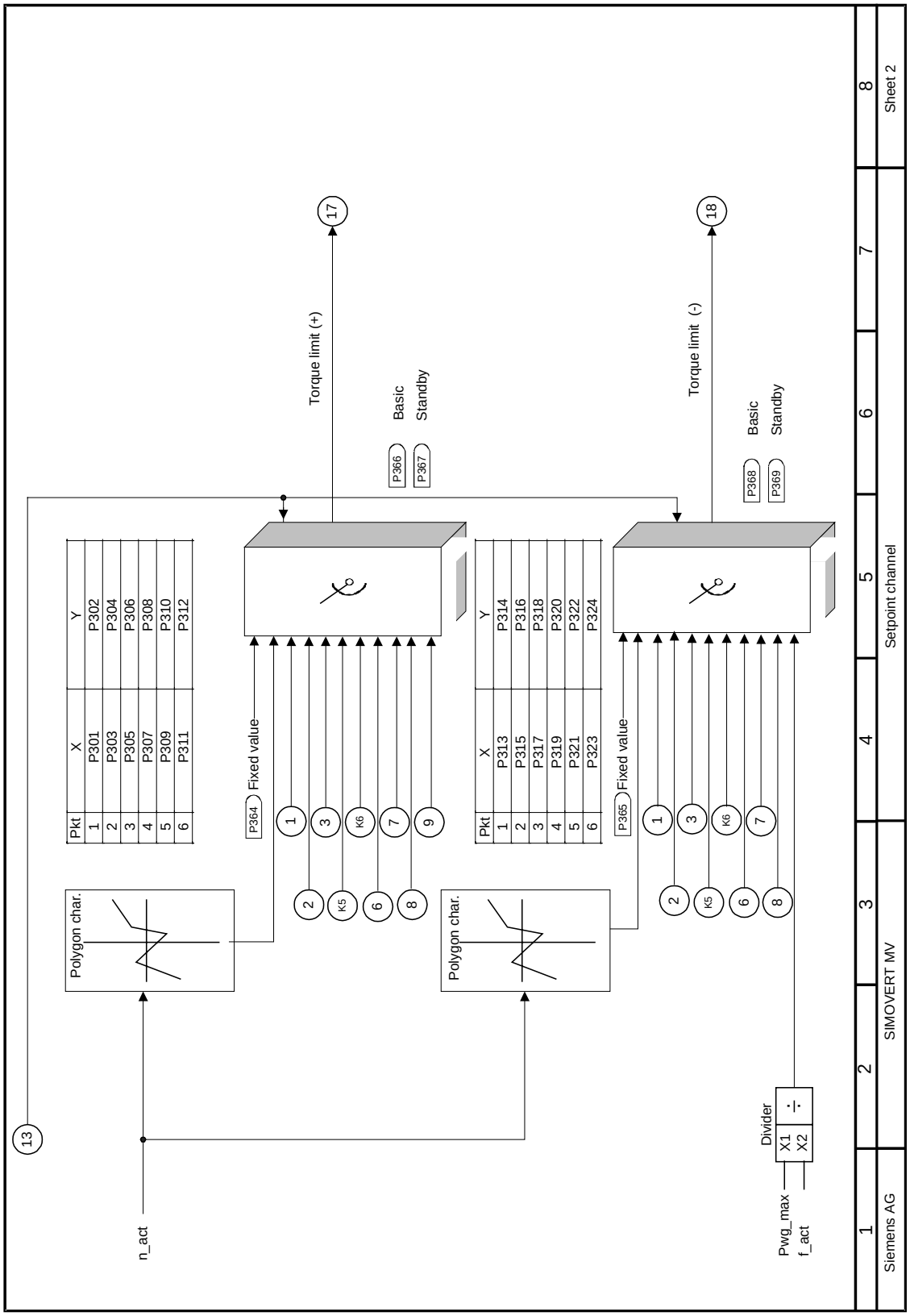

Fig. 4.6 Setpoint channel (Sheet 2)

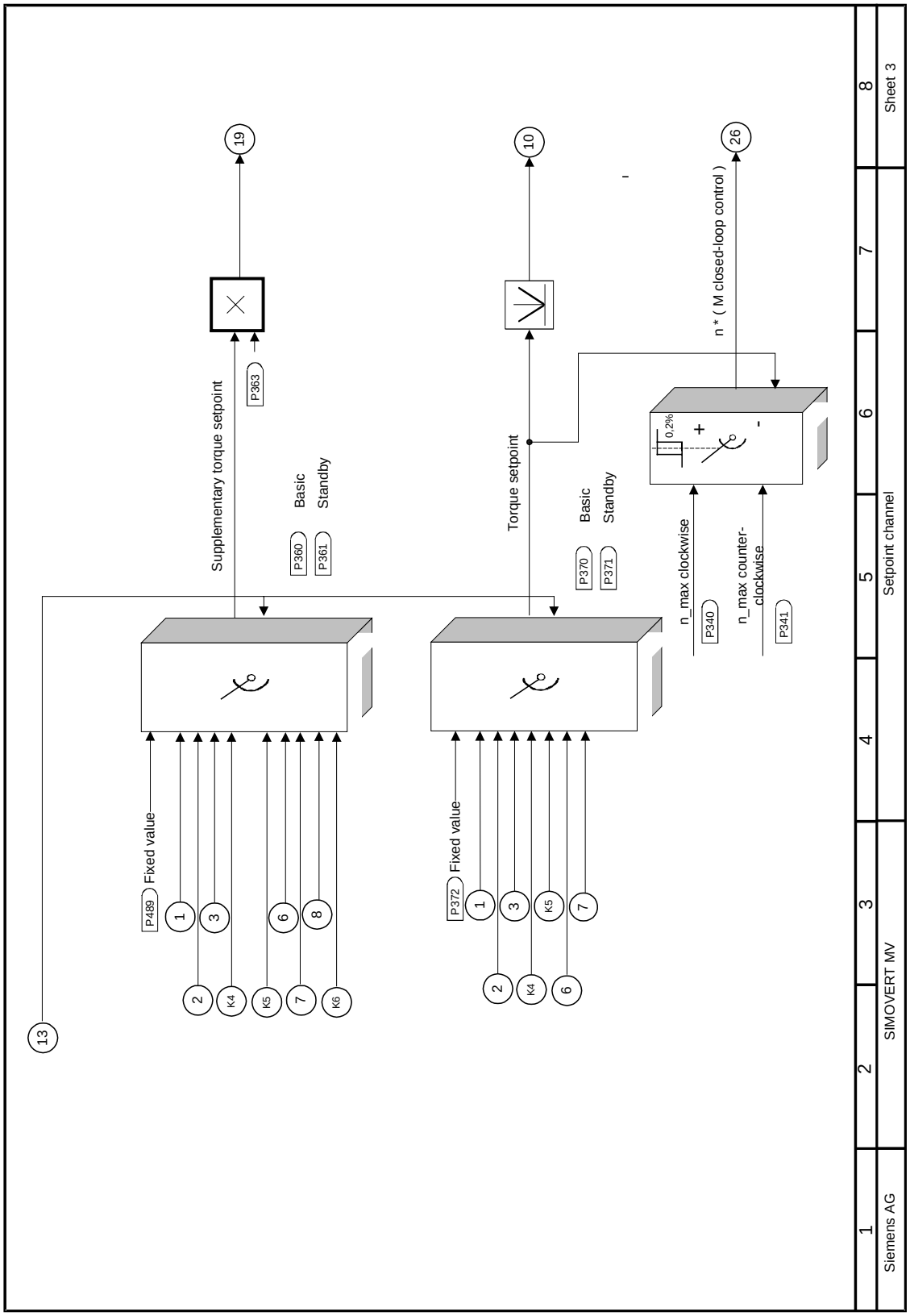

Fig. 4.7 Setpoint channel (Sheet 3)

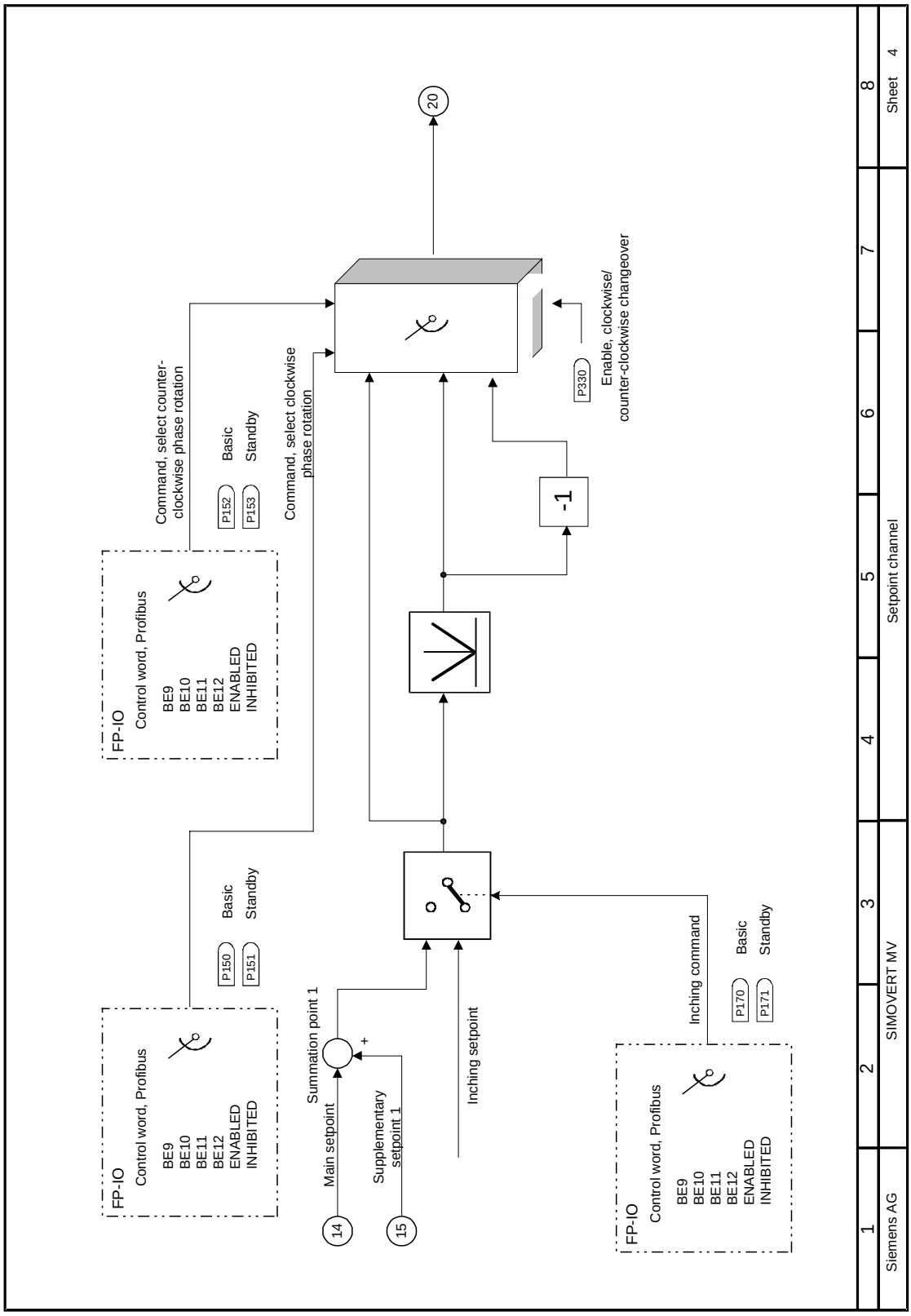

Fig. 4.8 Setpoint channel (Sheet 4)

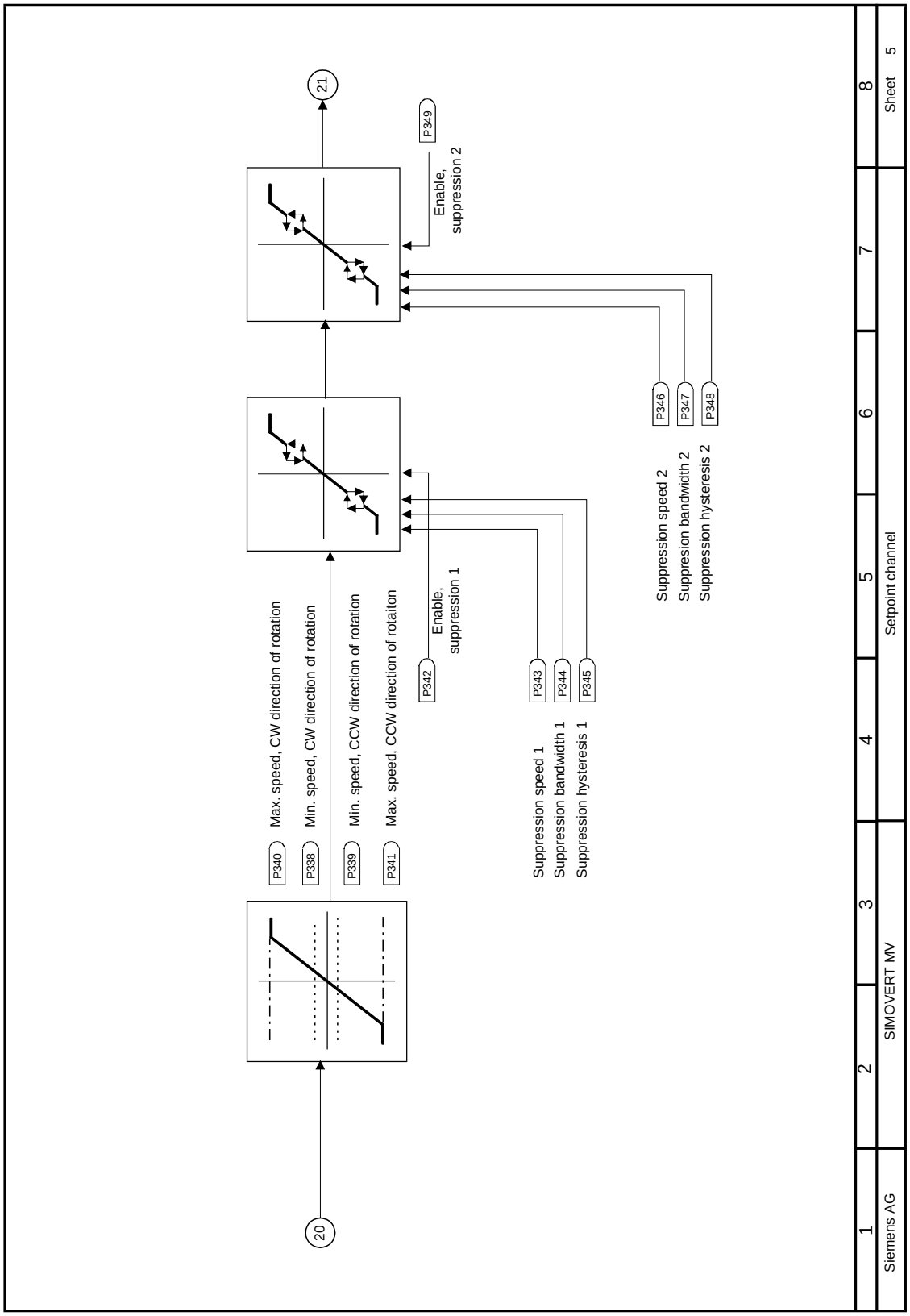

Fig. 4.9 Setpoint channel (Sheet 5)

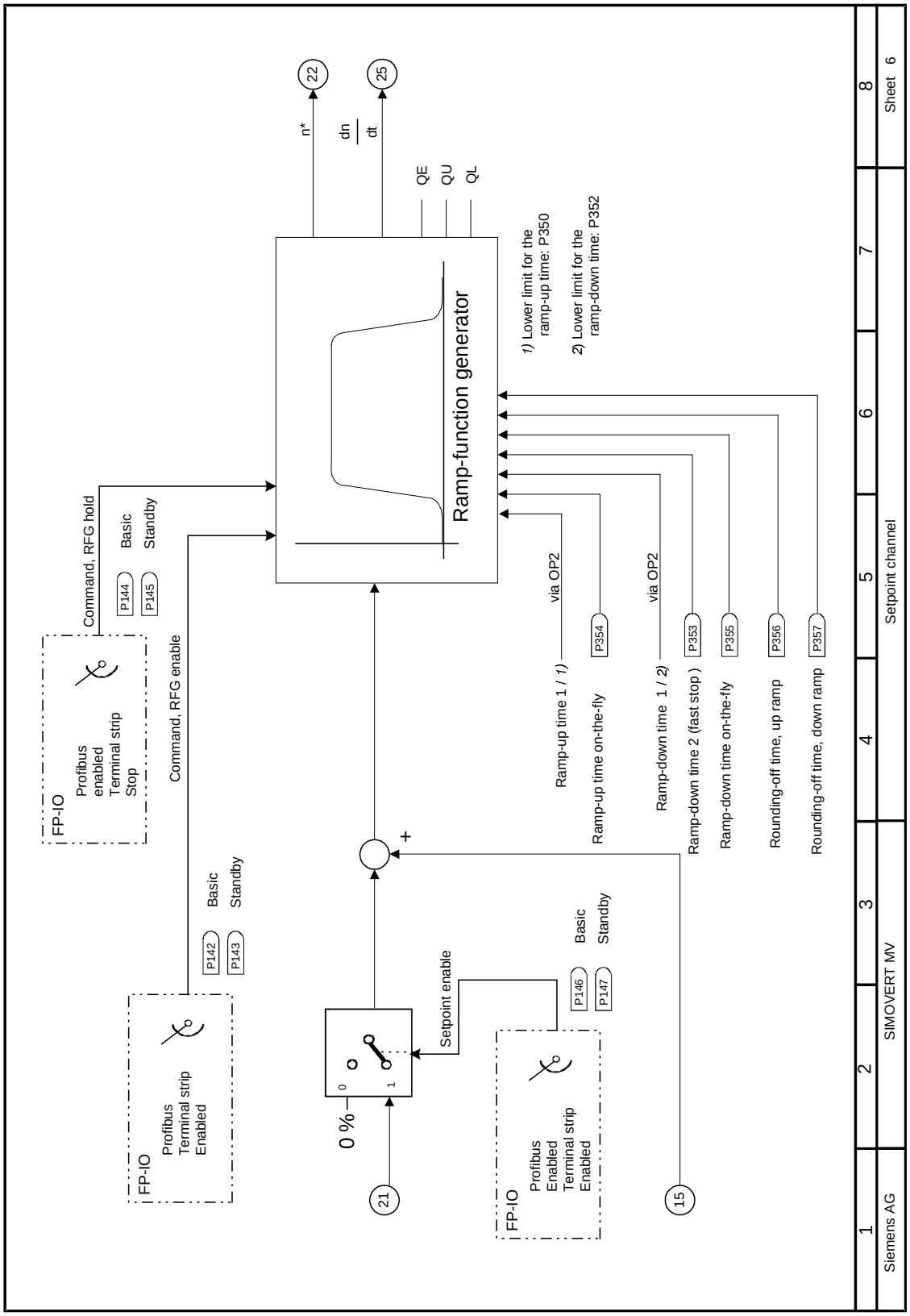

Fig. 4.10 Setpoint channel (Sheet 6)

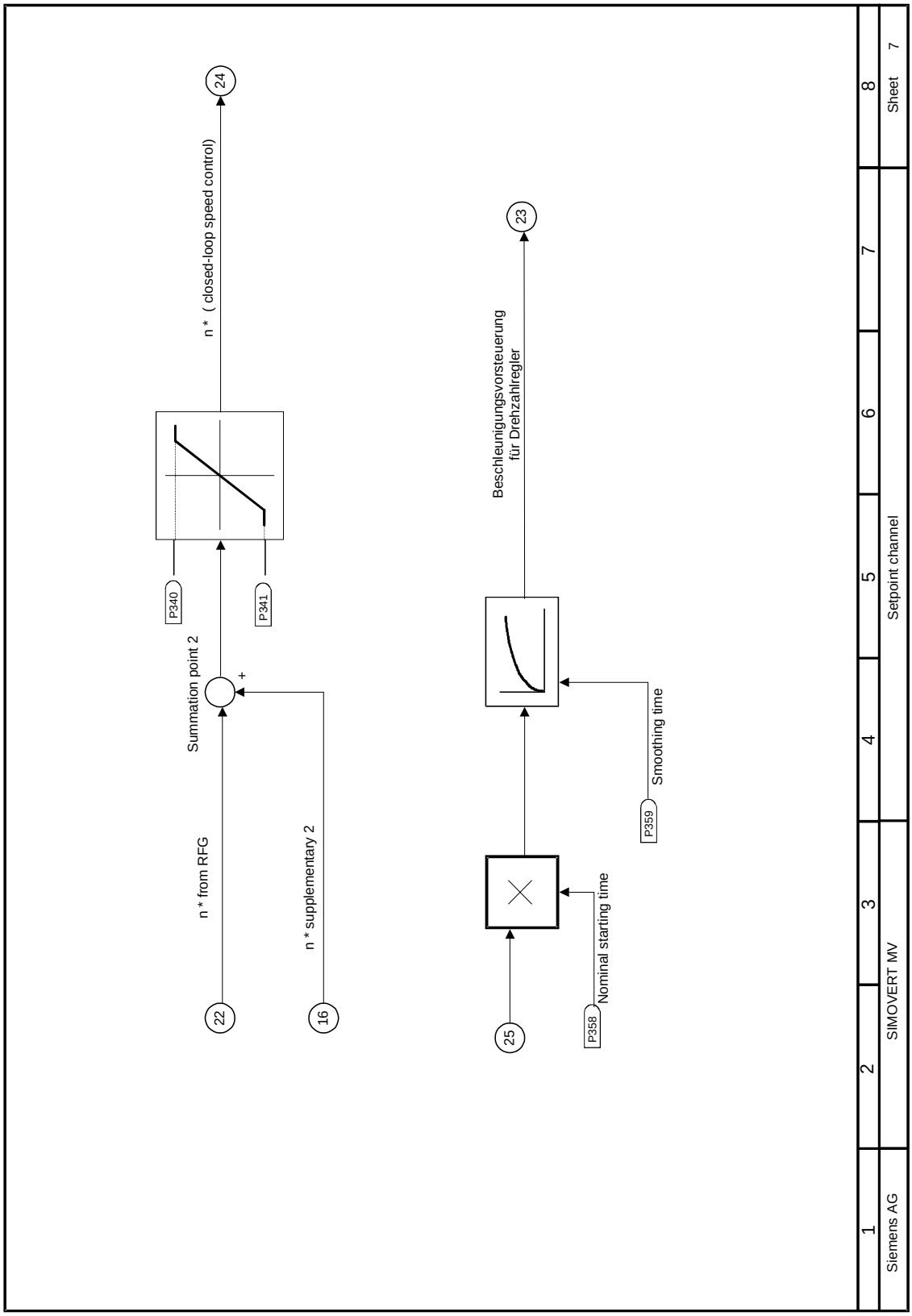

Fig. 4.11 Setpoint channel (Sheet 7)

4.4.7 FP-NRV1

This function package includes:

- Speed monitoring
- Speed controller
- Fault- and alarm messages from FP NRV1

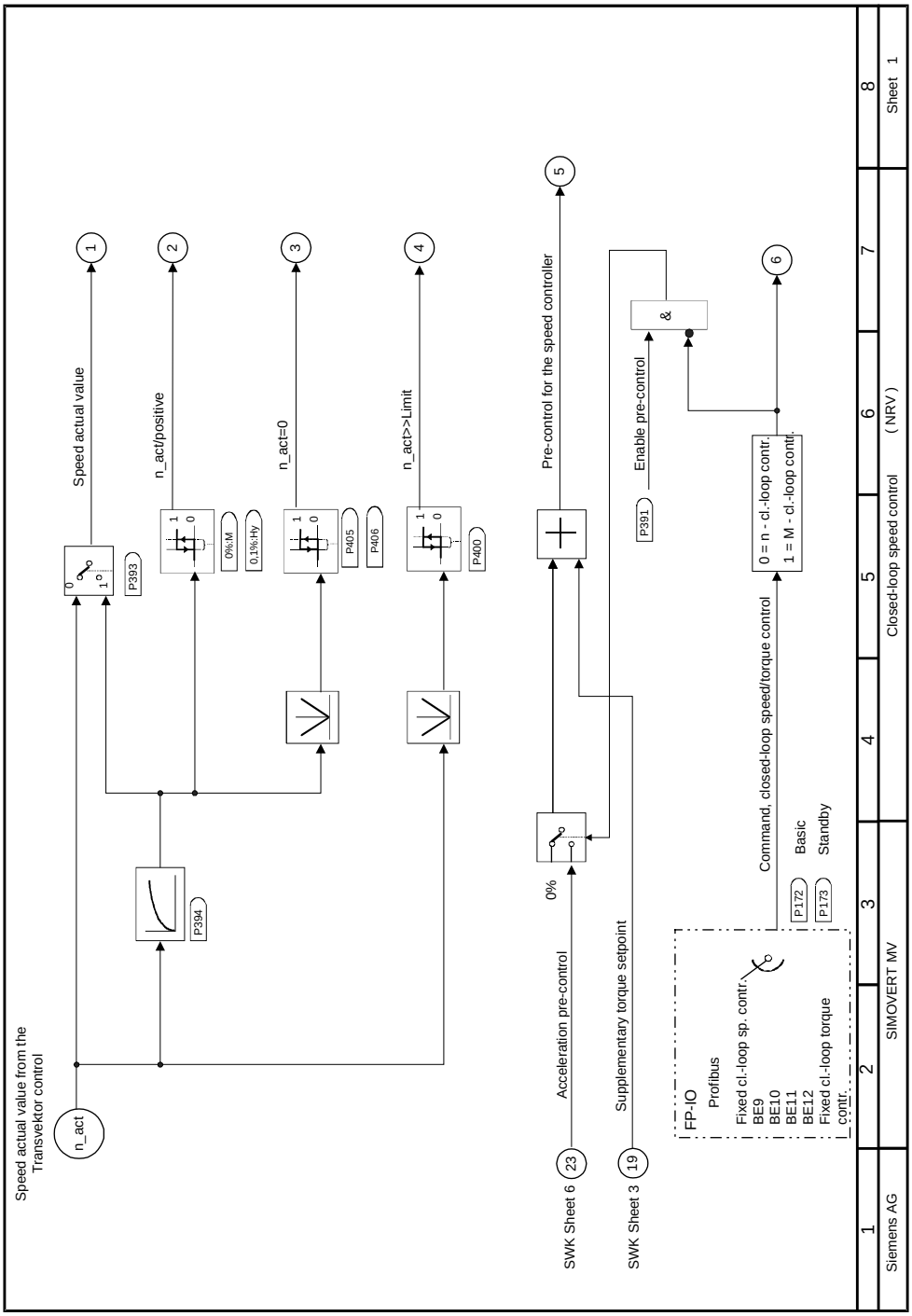

Fig. 4.12 Speed control (Sheet 1)

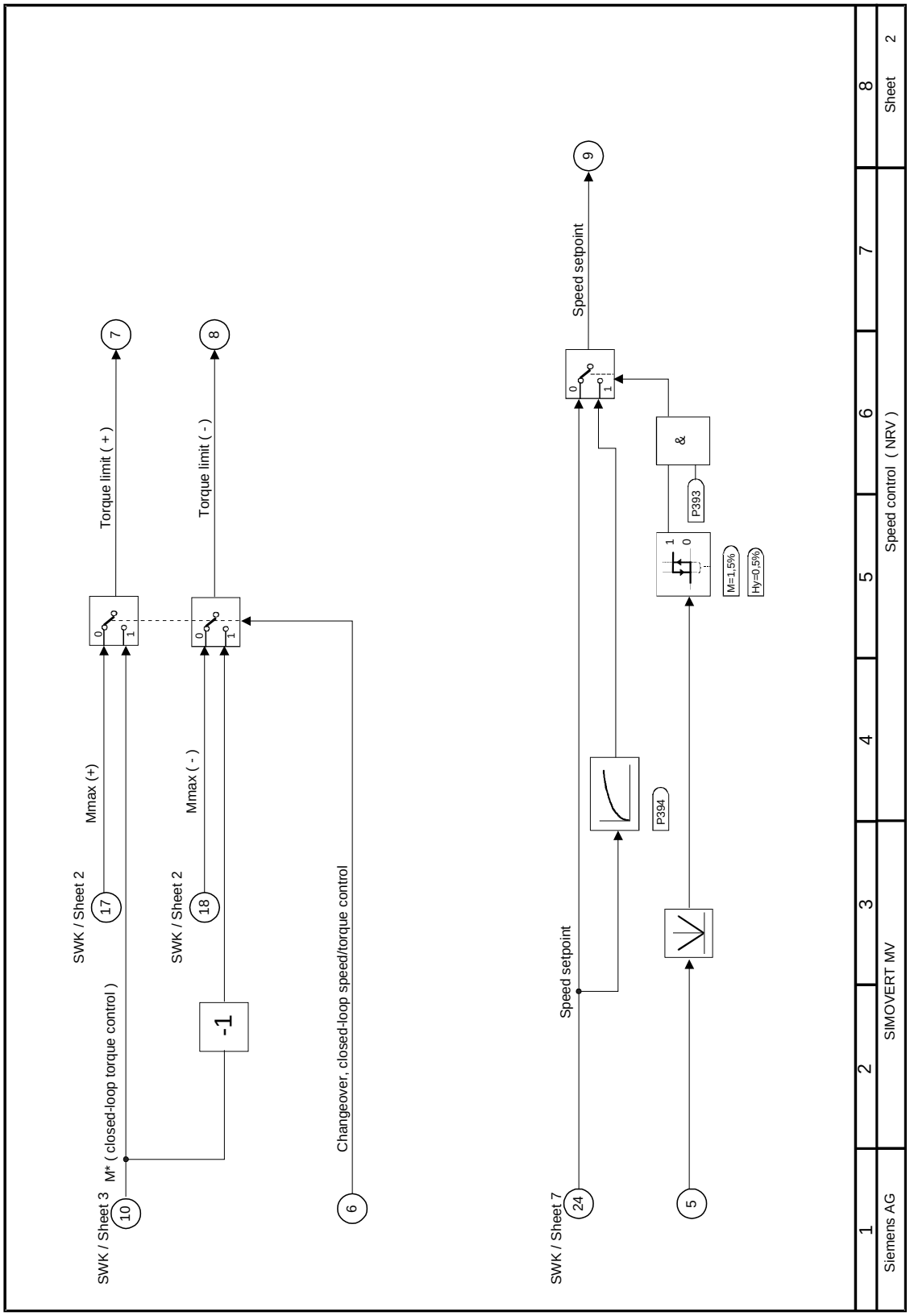

Fig. 4.13 Speed control (Sheet 2)

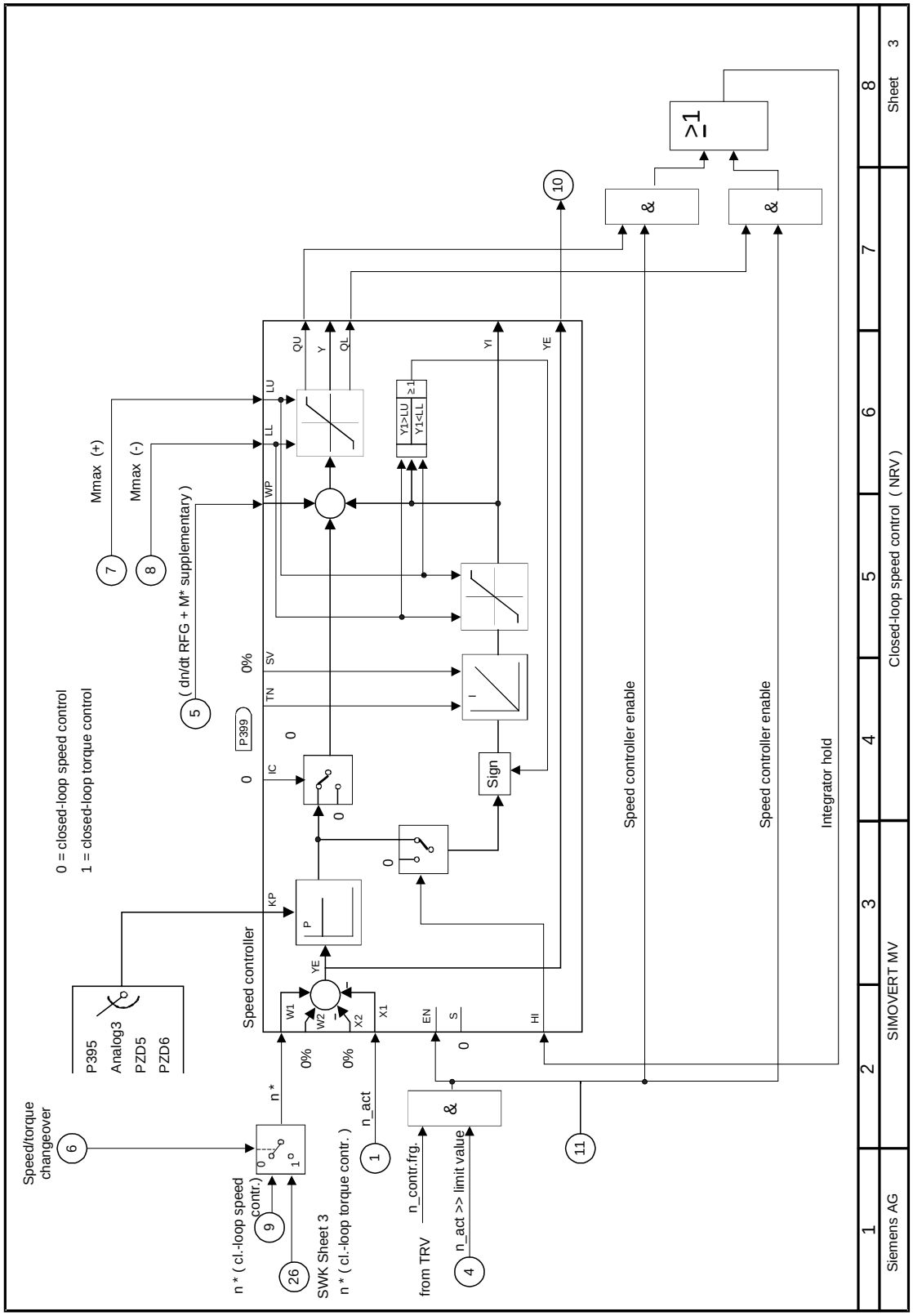

Fig. 4.14 Speed control (Sheet 3)

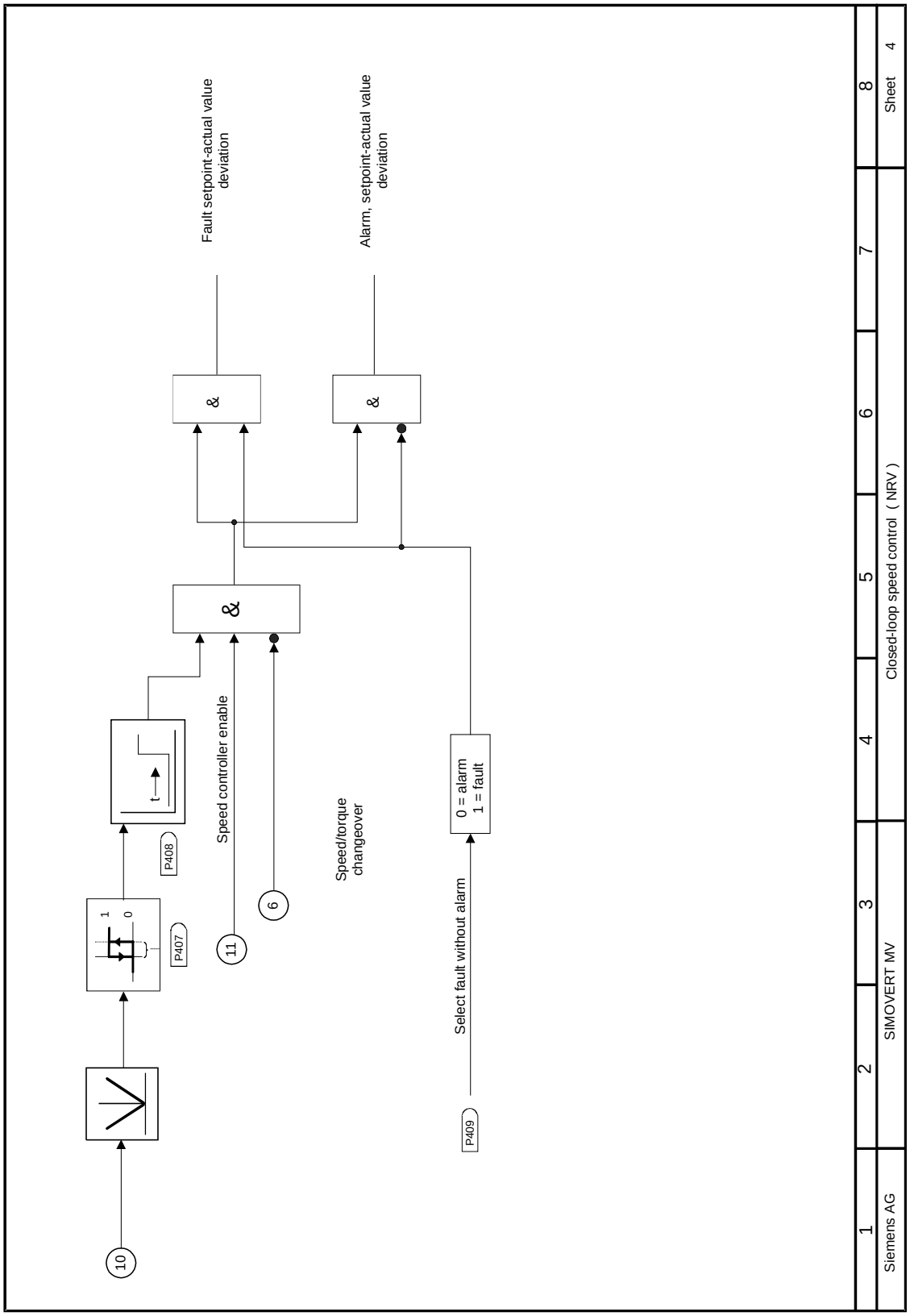

Fig. 4.15 Speed control (Sheet 4)

4.4.8 FP-WRS

This function package includes:

- Operating mode selection for Transvektor control

4.4.9 FP-BUB

This function package includes:

- Operating hours counter
- Operator control functions of the OP
- Actual value displays of the OP

4.4.10 FP-TRC

This function package includes:

- Trace functions

4.4.11 FP-TRV

This function package includes:

- Actual value sensing
- Normalization of the actual values
- Overcurrent monitoring
- DC link monitoring
- Initialization of the SUL
- Communications to the SUL
- Sub-station monitoring
- Speed actual value sensing
- Parameterization, motor data
- Parameterization, Transvektor control
- Gating unit, SIMOVERT MV
- Error messages of the FP TRV

4.4.12 FP-STV

This function package includes:

- Gating unit, SIMOVERT MV

4.4.13 FP-RAN

This function package includes:

- Marshalling of the analog input and output signals

An offset, proportional gain and smoothing time constant can be selected for each analog signal.

4.4.14 FP-@SEND1

This function package includes:

- Initialization of the couplings USS and monitor – send

4.4.15 FP-@SEND2

This function package includes:

- Initialization of the special communications

4.4.16 FP-@EMPF1

This function package includes:

- Initialization of the couplings USS and monitor – receive

5 Operation

The cabinet doors must always be closed when the drive converter is operational! The doors have limit switches, which immediately shutdown the drive converter (safety shutdown) if the doors are opened.
It is not permissible to **bypass or tamper** with the **door limit switches**!

Further, it is not permissible that objects are placed on the top roof assembly of the drive converter, as these could obstruct the pressure equalization flaps.

5.1 Operator control elements and door-mounted instruments

The operator control elements and door-mounted instruments are located in the door of the control cabinet.

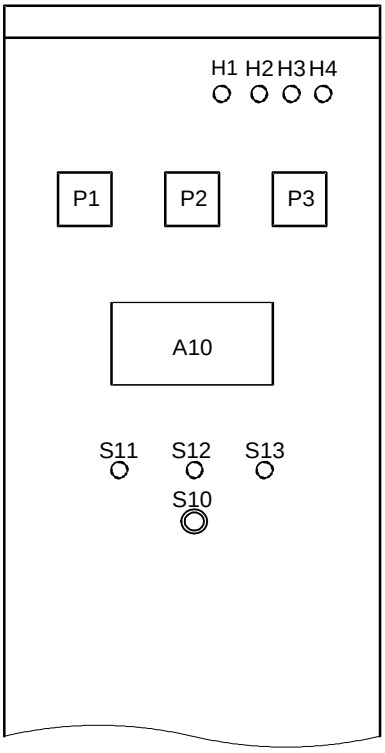

♦ **Signaling lamps**

H1 Drive converter OFF
H2 Drive converter ON
H3 Group alarm
H3 Group fault

♦ **Measuring equipment (option)**

P1 e.g. output voltage
P2 e.g. output current
P3 e.g. speed

♦ **Operator panel**

A10 Operator panel OP2
Pushbutton B3 lamp test
Pushbutton B4 fault acknowledgement

♦ **Pushbuttons and switches**

S10 Mushroom head pushbutton for safety shutdown
S11 Pushbutton, drive converter ON
S12 Pushbutton, drive converter OFF
S13 Key-actuated switch for changeover, local/remote operation

5.2 Operator control panel OP2

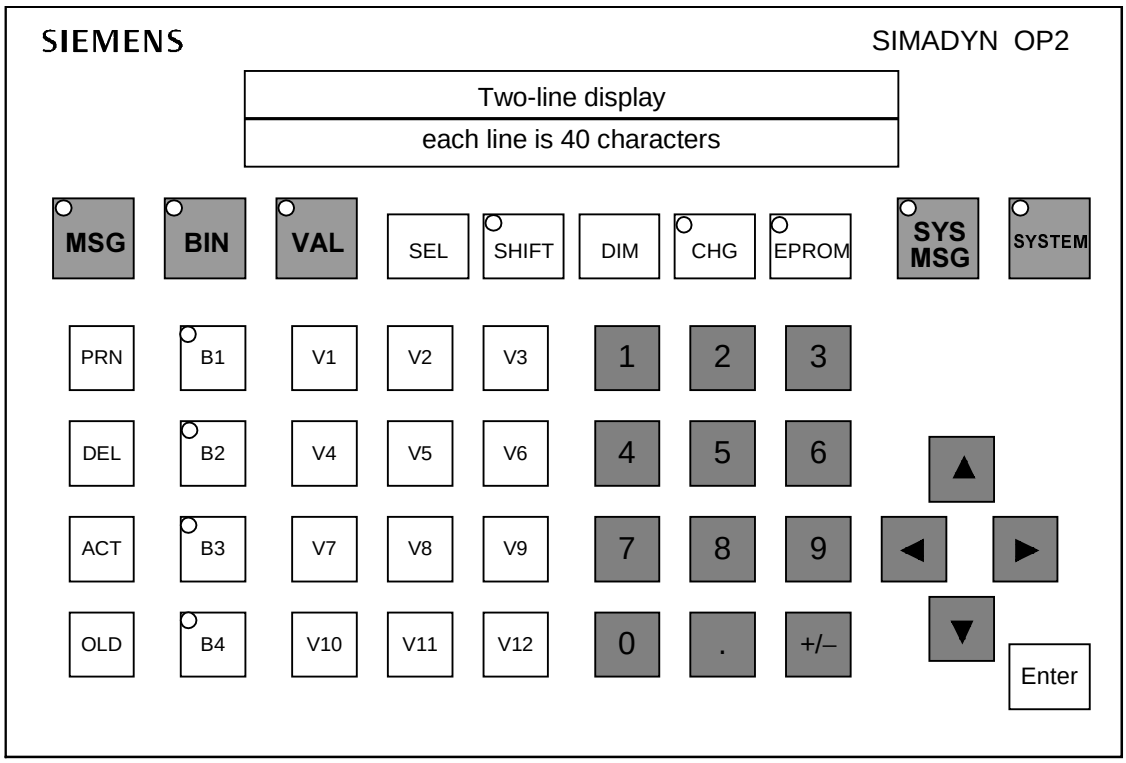

Fig. 5.1 OP2 HMI

Pre-settings

The OP2 operator control device is supplied with the following pre-settings:

- USS interface
- Station Address 0 or 1
- Baud rate 19.2 kbaud
- Delay Time 100 ms

5.2.1 Language changeover

The following languages are available:

- German
- English

If the language is to be changed, then a Boolean value must be entered at input connector 1in the operator control and visualization function package (FP-BUB), at block SPR. In this case, a logical 0 corresponds to German and a logical 1 to English

In addition, the basic address of the OP2 operator control device must be changed. The OP2 address 0 (station address) for German and the OP2 address 1 for English.

5.2.2 Parameterization for the USS interface

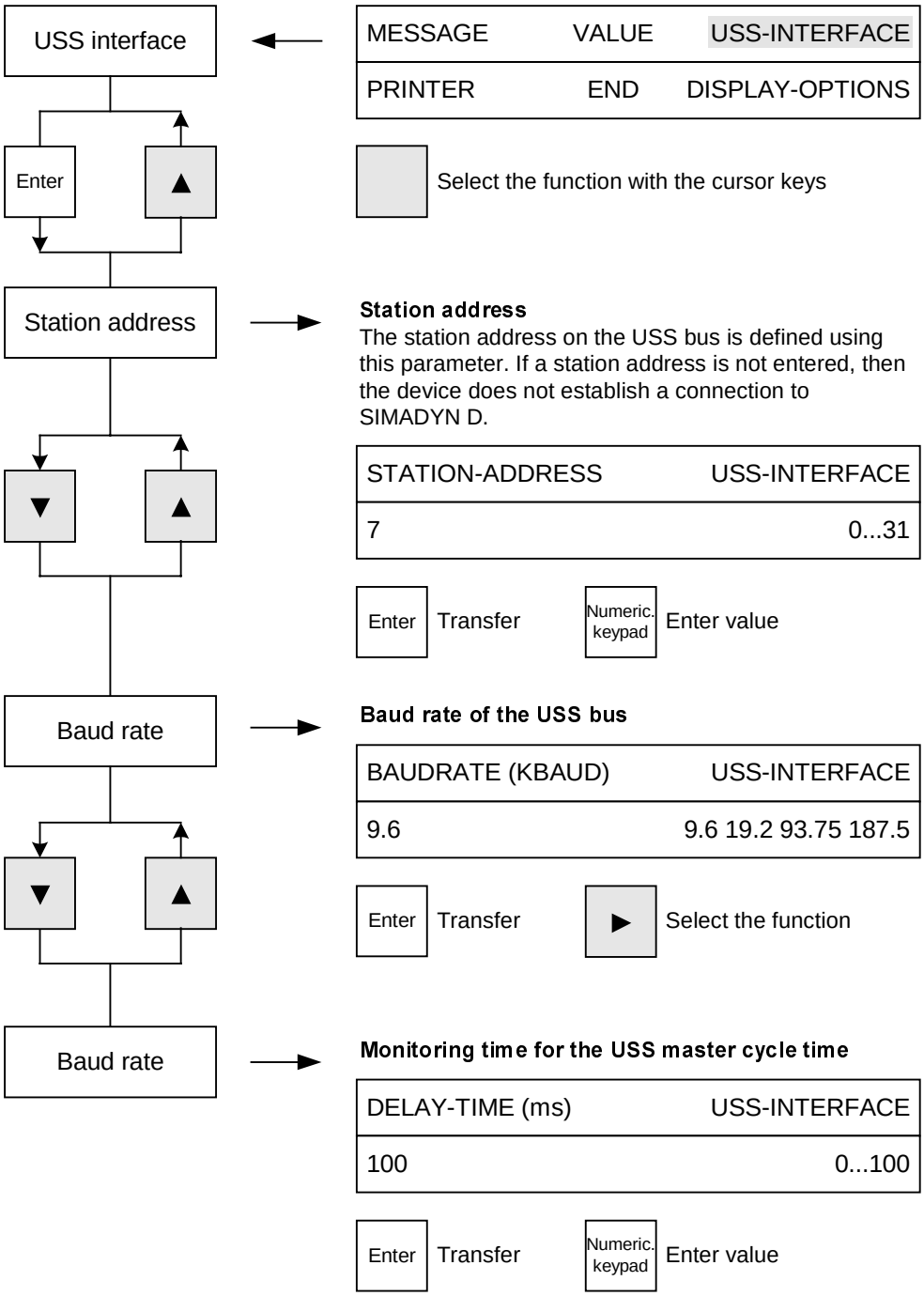

5.2.3 Commands to the drive converter (binary value processing)

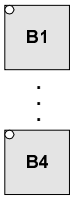

Keys B1 to B4 can always be selected, with the exception when system processing has been selected (SYSTEM).

The LED on the four binary keys indicates whether the appropriate binary value is at "0" (LED dark) or at "1" (LED bright). The status is inverted by pressing the key.

The LED flashes each time the key is pressed, until SIMADYN D acknowledges the change.

If the binary values are not configured on the SIMADYN D side, then the LEDs of keys B1to B4 remain dark (this means that the keys have no effect).

Start of the binary value menu. Binary values B5 to B32 are processed.
The binary values cannot be saved in the EPROM of SIMADYN D. If this is required, the binary values must be configured as process data in SIMADYN D.

The actual function is exited using: 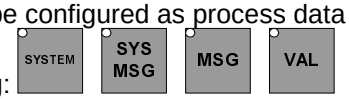

Assigning the binary values for SIMOVERT MV drive converters

The software supports the command keys B3 and B4 and the binary values B5 to B9.

♦ **Command key B3**

The command key B3 [LT] initiates the lamp test for the signal lamps in the front panel of the drive converter.

♦ **Command key B4**

The command key B4 [Acknowledge] is used to acknowledge drive converter faults. The acknowledge signal is generated at each edge change.

♦ **Binary value 5**

This manually triggers the trace blocks. The trace is stopped using this command. Actual values, saved in the ring buffer, can be read-out. The trace recording is also stopped by a class 1 error, class 2 error, or a threshold comparison.

For the threshold comparison, a selected actual value is compared with a freely selectable threshold.

The trigger conditions > = < are possible.

♦ **Binary value 6**

Trace record enable. The trace record is enabled using this command. The actual values are cyclically written into the ring buffer.

♦ **Binary value 7**

Trace output. The values saved in the ring buffer are output using this command. If the command is repeated, the output is repeated. This command does not delete the ring buffer.

♦ **Binary value 8**

This deletes the ring buffer trace. This command deletes the values saved in the ring buffer.

♦ **Binary value 9**

When the drive converter is in the OFF condition, the fan or the cooling unit can be powered-up with binary value 9 from the OP2 operator control device.

5.2.4 Setpoint inputs

Process data processing

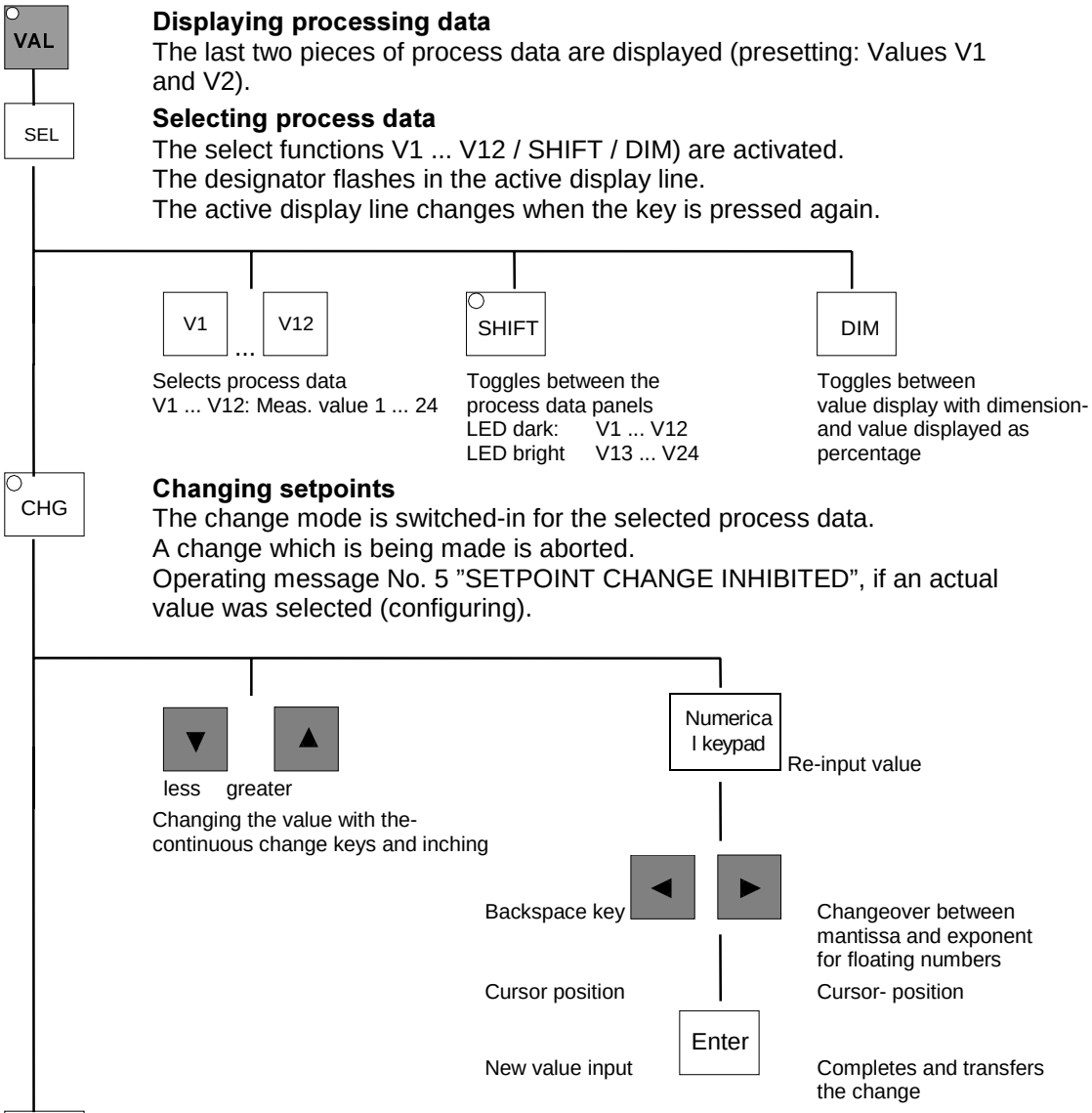

Displaying processing data
The last two pieces of process data are displayed (presetting: Values V1 and V2).

Selecting process data
The select functions V1 ... V12 / SHIFT / DIM) are activated.
The designator flashes in the active display line.
The active display line changes when the key is pressed again.

Changing setpoints
The change mode is switched-in for the selected process data.
A change which is being made is aborted.
Operating message No. 5 ”SETPOINT CHANGE INHIBITED”, if an actual value was selected (configuring).

Saving changes in the EPROM of SIMADYN D
Activating the memory function
The LED flashes until the function is completed using the Enter key.
Operating message No. 35 ”EPROM SAVE UNSUCCESSFUL”. The value is not transferred if an error occurred.

Value transfer

The currently executed function is aborted using: SYSTEM, SYS MSG, VAL, BIN

Return to display operation: MSG

Setpoint inputs

If the OP2 is selected as setpoint source, the speed setpoint can be entered using the V1 [Value 1]. The value can either be entered as positive or negative value. A negative setpoint corresponds to a counter-clockwise motor direction or rotation. The setpoint is not limited here. The setpoint from OP2 is transferred to the setpoint channel, where it is limited by the selectable maximum-/minimum speed.

5.2.5 Actual value displays

Process data

Two of a total of 24 process data can be simultaneously displayed (upper and lower display line). 24 values are sub-divided onto two panels for selection (V1..V12 and SHIFT+V1..V12).

The two panels can be sub-divided according to setpoint and actual values as required (for example, 20 actual values or also only 3 can be configured). The sub-division according to setpoints and actual values is exclusively realized by appropriately configuring the SIMADYN D:

The selected process data values are always displayed, as pre-set in the normalized representation type and with dimension information and name. If a name has not been configured, then the designator "VALUE xy“ (xy = 1 ..24) is displayed as pre-set.

If a process data is selected which is not configured, then operating message 14 is displayed ("NO MEASURED VALUE INITIALIZED“). This text is displayed for 3 seconds, and then the previous value is re-displayed.

Actual values on the display

The actual values can be visualized on the OP2 operator control device display:

Key	Significance
V2	Speed actual value as a percent referred to the rated motor speed
V3	Motor current actual value as a percent referred to the rated motor current
V4	Motor voltage as a percent referred to the rated motor voltage
V5	DC link voltage as a percent referred to the rated DC link voltage
V6	free
V7	Motor active power as a percent referred to the rated motor output
V8	free
V9	free
V10	Motor cos Phi
V11	Operating hours of the drive converter (0 - 24)
V12	Operating days of the drive converter (1 - 32000)
Shift+	
V1 (V13)	n_max clockwise rotating field, entered from OP2 within the start-up limits
V2 (V14)	n_max counter-clockwise rotating field, entered from OP2 within the start-up limits
V3 (V15)	n_min clockwise rotating field, entered from OP2 within the start-up limits
V4 (V16)	n_min counter-clockwise rotating field, entered from OP2 within the start-up limits
V5 (V17)	Fixed setpoint 1, entered from OP2 within the start-up limits
V6 (V18)	Fixed setpoint 2, entered from OP2 within the start-up limits
V7 (V19)	Inching setpoint, entered from OP2 within the start-up limits
V8 (V20)	Ramp-up time 1, entered from OP2 within the start-up limits
V9 (V21)	Ramp-down time 1, entered from OP2 within the start-up limits
V10 (V22)	Maximum torque, motoring, entered from OP2 within the start-up limits
V11 (V23)	Value selection to represent/display the binary vectors for key "Shift+V12" of the OP2 (also refer to Section 5.2.7)
V12 (V24)	Actual value display of the binary vector selected by key "Shift+V11"

5.2.6 Message system processing

Message system processing

The OP2 combines all of the incoming messages into a dedicated message system which can administer a maximum of 30 messages (save). If more messages are received, then the messages which were first received, are overwritten (ring buffer mechanism), and an overflow message is entered into the buffer. Operating message No. 15 (”NUMBER OF LOST MESSAGES: xx”), xx specifies the number of messages which have been overwritten.

Only one message can be displayed at any one time. OP2 chronologically sorts all of the messages which it has received.

Evaluating message class ranges

An OP2 does not have to administer all of the messages which it receives from SIMADYN D. Messages classes are assigned as selection criteria to define which messages the OP2 should administer. These are specified when the OP2 is parameterized. All of the messages can be permitted, or 1, 2 or 3 message class ranges.

The message classes are defined in SIMADYN D when the message systems are configured.
(refer to the system software and configuring D7-SYS, message class = prefix).

Operator control overview for message processing

The message system processing is selected using the MSG key. The key LED is lit (bright) after it has been selected. If the OP2 has not received any messages, operating message No. 16 is displayed (”NO MESSAGES AVAILABLE”). The text is kept until either a message is received, or another function is selected (e.g. VAL key).

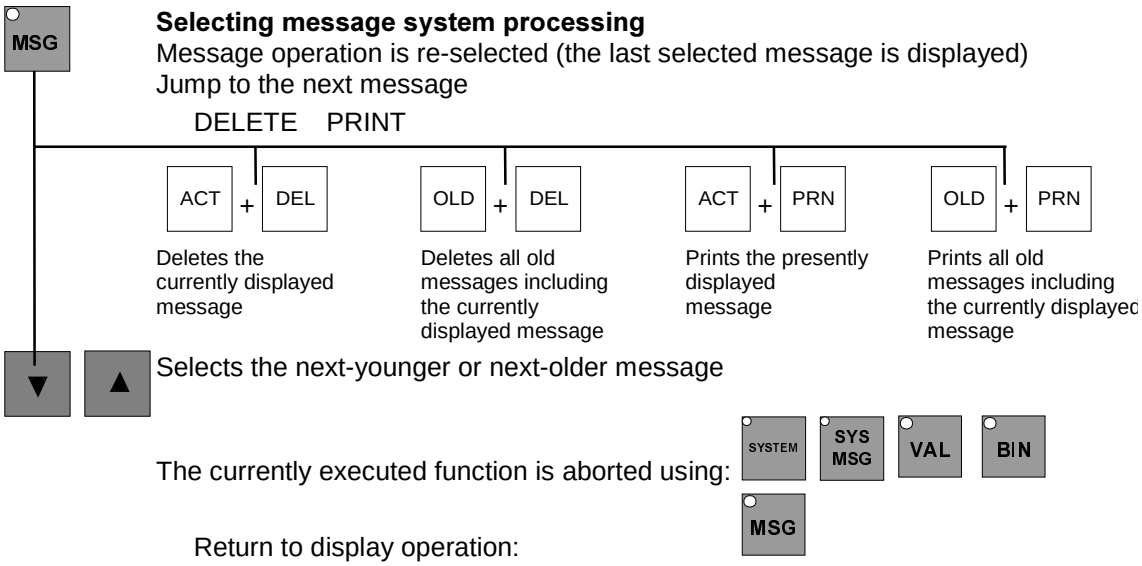

Selecting message system processing
Message operation is re-selected (the last selected message is displayed)
Jump to the next message

If the OP2 has received new messages from SIMADYN D (since the last time that the message system processing was selected), then the LED in the MSG flashes, if the message system processing has not been selected.

When the message system processing is re-selected, the last selected message is re-displayed. The latest message is displayed when the key is pressed again. You can scroll in the selected OP2 message system using the raise/lower keys. Invalid key combinations are rejected directly at the OP2 with an appropriate acknowledgement.

Messages on the display

The OP2 displays messages in two different message formats. These two message formats are:

- **ASCII text messages:**
  These comprise:
  Date/time, message type, message text and process data/dimension:
- **Prefix/suffix messages:**
  These comprise:
  Date/time, message type, prefix, suffix and process data/dimension

Date/time Comprise the day, month, year, hour, minute, second and milliseconds.

Message types: Alarm, fault, communications and system errors.
The conditions/representation types of the message system should be used (syntax).

Process data/ dimension are optional data in a particular message, and are exclusively dependent on the configured software in SIMADYN D.

The configuring engineer defines the display format on the SIMADYN D side by appropriately configuring the message systems.

You will find additional information in the User Documentation for SIMADYN D system software and D7-SYS configuring.

The OP2 displays the messages configured in SIMADYN D as follows:

Possible message formats

Prefix/Suffix	Text	Evaluation and display on the OP2
no	no	Message is not administered.
yes	no	The prefix is evaluated as message class. If the message class is permissible, the message is administered in the prefix/suffix format.
no	yes	Messages without prefix/suffix with text are always administered in the OP2.
yes	yes	Prefix is evaluated as message class. If it is valid, the message is administered in the text format.

ASCII text message

If a process data (with dimension) is included in a message, then the OP2 cuts-off the message text after 28 characters (this is independent as to whether a dimension is present or not). The message text may be 56 characters long if no process data is available.

If the message text is shorter than the maximum length, then the remaining characters are filled using "blank characters", i.e. the display remains "dark" at these positions. Thus, the display (2x40 characters) have the following message formats (d = day, m = month or minute, y = year, h = hours, z = milliseconds, T = message type (alarm, fault etc.):

1) **Message with process data (and dimension): max. 28. message characters:**

   `dd.mm.yy hh:mm:ss.zzz T MAX. 28 CHARACTERS ARE LOCATED HERE!! -999.12345678 E+99 DIMENSIO`

2) **Message without process data: Max. 56 message characters:**

   `dd.mm.yy hh:mm:ss.zzz T MAX. 56 CHARACTERS ARE HERE, WHICH COME FROM SIMADYN D!!!!`

Example of a message in the ASCII text format with measured value (without dimensions):

`01.10.94 00:00:05:167 W THE MOTOR RUNS WITH CURRENT UE -99999.1234567 E+99`

Prefix/suffix message

The following message formats can be displayed on the OP2 for the "prefix/suffix" format. (d = day, m = month or minute, y = year, h = hour, z = milliseconds, T = message type (alarm, fault etc.):

1) **Message with process data (and dimensions):**

   `dd.mm.yy hh:mm:ss.zzz T P:54321 S:54321 -999.12345678 E+99 DIMENSIO`

2) **Message without process data:**

   `dd.mm.yy hh:mm:ss.zzz T P54321 S:54321`

5.2.7 Status displays

A binary vector can be switched to the actual value display V24 [SHIFT + V12] using key V23 [SHIFT + V11]. This allows internal drive converter statuses to be visualized using the operator panel.

The following signals can be selected using key V23. The actual values of the selected signals can be visualized in V24.

Guideline: All signals are high-active (log 1 ≙ the command/status is present). Exceptions are specifically referred to.

The drive converter executes the commands available at the power-on logic in control words 1 and 2. These control words are listed in function package I/O (refer to Fig. 4.1) The command sources for the individual control word bits are also defined in function package I/O.

Control word 1 at the power-on logic

V23 input value = 1

V24 actual value = **control word 1** at the power-on logic

Bit 0 ON / OFF 1 (a log. 1 ≙ the ON command)

Bit 1 OFF2 (a log.1 ≙ the OFF2 command)

Bit 2 OFF3 (a log. 1 ≙ the OFF3 command)

Bit 3 Inverter enable (a log. 1 ≙ inverter enable)

Bit 4 Ramp-function generator enable (a log. 1 ≙ RFG enable)

Bit 5 Ramp-function generator hold (a log. 1 ≙ RFG hold)

Bit 6 Setpoint enable (a log. 1 ≙ setpoint enable)

Bit 7 Acknowledge (a log. 1 ≙ acknowledge command; 1 s pulse)

Bit 8 Inching (a log. 1 ≙ inching command)

Bit 9 Free

Bit 10 Control from the automation system (a log. 1 ≙ control from the automation system)

Bit 11 Clockwise rotating field selection (a log. 1 ≙ CRF)

Bit 12 Counter-clockwise rotating field selection (a log. 1 ≙ CCRF)

Bit 13 Motorized potentiometer, raise (a log. 1 ≙ command, raise motorized potentiometer)

Bit 14 Motorized potentiometer, lower (a log. 1 ≙ command, lower motorized potentiometer)

Bit 15 External fault (a log. 1 ≙ fault)

Control word 2 at the power-on logic (being prepared)

V23 input value = 2
V24 actual value = **control word 2** at the power-on logic

Bit 0 Checkback signal, transformer ready (a log. 1 ≙ ready)
Bit 1 Checkback signal, transformer alarm (a log. 1 ≙ alarm)
Bit 2 Checkback signal, transformer fault (a log. 1 ≙ fault)
Bit 3 Checkback signal, motor ready (a log. 1 ≙ ready)
Bit 4 Checkback signal, motor alarm (a log. 1 ≙ alarm)
Bit 5 Checkback signal, motor fault (a log. 1 ≙ fault)
Bit 6 Checkback signal, cooling unit ready (a log. 1 ≙ ready)
Bit 7 Checkback signal, cooling unit alarm (a log. 1 ≙ alarm)
Bit 8 Checkback signal, cooling unit fault (a log. 1 ≙ fault)
Bit 9 External alarm (a log. 1 ≙ alarm)
Bit 10 Checkback signal circuit-breaker OPEN (a log. 1 ≙ circuit-breaker is OPEN)
Bit 11 Command, safety shutdown (a log.1 ≙ safety shutdown)
Bit 12 Select, fixed setpoint bit 0 (a log. 1 ≙ selection)
Bit 13 Select, fixed setpoint bit 1 (a log 1 ≙ selection)
Bit 14 Speed/torque control selection (a log 1 ≙ speed control)
Bit 15 Free

Control word of the power-on logic at the periphery

V23 input value = 3
V24 actual value = control word of the power-on logic at the periphery

Bit 0 Auxiliaries, ON command
Bit 1 DC link pre-charging
Bit 2 Circuit-breaker CLOSE command
Bit 3 Enable rectifier
Bit 4 Enable inverter
Bit 5 Enable setpoint
Bit 6 Change the ramp-function generator ramp time
Bit 7 Inhibit setpoint
Bit 8 Inhibit inverter
Bit 9 Inhibit rectifier
Bit 10 Circuit-breaker OFF command
Bit 11 Command, discharge DC link
Bit 12 Auxiliaries OFF command
Bit 13 Not assigned
Bit 14 Command, drive converter ON
Bit 15 Not assigned

Statuses of the power-on logic

V23 input value = 4

V24 actual value = power-on logic statuses

Bit 0	Drive converter is in the OPERATION status
Bit 1	Drive converter is in the OFF status
Bit 2	Drive converter is in the READY status
Bit 3	Drive converter is in the READY TO POWER-ON status
Bit 4	Drive converter is in the NOT READY TO POWER-ON status
Bit 5	Drive converter is in the FAULT status
Bit 6	Drive converter is in the PRE-CHARGING status
Bit 7	Drive converter is in the DISCHARGE status
Bit 8	Not assigned
Bit 9	Not assigned
Bit 10	Not assigned
Bit 11	Not assigned
Bit 12	Not assigned
Bit 13	Not assigned
Bit 14	Not assigned
Bit 15	Checkback signal, power-on logic faulted

Control word at the enable control of the Transvektor closed-loop control

V23 input value = 5

V24 actual value = control word **at the** enable control of the Transvektor closed-loop control

Bit 0	Command, initiate GSV test
Bit 1	Command, switch-on the Transvektor closed-loop control
Bit 2	Command, Transvektor closed-loop control, standard operation
Bit 3	Command, Transvektor closed-loop control, operation with setpoint generator without excitation
Bit 4	Command, Transvektor closed-loop control, operation with setpoint generator and excitation
Bit 5	Not assigned
Bit 6	Not assigned
Bit 7	Not assigned
Bit 8	Not assigned
Bit 9	Not assigned
Bit 10	Not assigned
Bit 11	Not assigned
Bit 12	Command, select inverter system A
Bit 13	Command, select inverter system B (only for parallel circuit configuration !)
Bit 14	Not assigned
Bit 15	Not assigned

Control word from the enable control to the Transvektor closed-loop control

V23 input value = 6

V24 actual value = control word **from the** enable control to the Transvektor closed-loop control

Bit 0 Transvektor closed-loop control disabled
Bit 1 TR initialization active
Bit 2 TR initialization completed
Bit 3 Request, excitation current enable
Bit 4 Zero point check active
Bit 5 Zero point check completed
Bit 6 Enable excitation current
Bit 7 TR locating active
Bit 8 TR locating completed
Bit 9 TR magnetization, continue
Bit 10 TR magnetization completed
Bit 11 Enable phase current controller
Bit 12 Enable speed controller
Bit 13 Not assigned
Bit 14 Not assigned
Bit 15 Not assigned

Status word at the Profibus interface

V23 input value = 7

V24 actual value = status value at the PROFIBUS interface

Bit 0 Drive converter is in the READY TO POWER-ON condition
Bit 1 The converter is in the READY condition
Bit 2 The converter is in the RUN condition
Bit 3 The converter is in the FAULT condition
Bit 4 The converter is in the condition, NO OFF2 command
Bit 5 The converter is in the condition, NO OFF3 command
Bit 6 The converter is in the POWER-ON INHIBIT condition
Bit 7 The converter is in the ALARM condition
Bit 8 The converter is in the condition, SETPOINT-ACTUAL VALUE-deviation outside the tolerance range
Bit 9 The converter is in the status, LOCAL OPERATOR control selected
Bit 10 The converter is in the status, COMPARISON FREQUENCY REACHED
Bit 11 not assigned
Bit 12 not assigned
Bit 13 not assigned
Bit 14 not assigned
Bit 15 not assigned

Group error word for the Transvektor closed-loop control

V23 input value = 8

V24 actual value = group error word from the Transvektor closed-loop control

Bit 0 Error in the enable control for the Transvektor closed-loop control
Bit 1 Error in the control block, DRIVE PARAMETER ML
Bit 2 Error in the control block of the FLUX CHARACTERISTIC
Bit 3 Error in the control block, VOLTAGE/FLUX CONTROL
Bit 4 Error in the control block, MAGNETIZING CHARACTERISTIC
Bit 5 Error in the control block, VOLTAGE MODEL
Bit 6 Error in the control block, CURRENT MODEL
Bit 7 Error in the control block, ORIENTATION SELECTION
Bit 8 Error in the control block, PRE-CONTROL
Bit 9 Error in the control block, CURRENT ACTUAL VALUE CONDITIONING
Bit 10 Error in the control block, CURRENT CONTROL
Bit 11 Error in the control block, VOLTAGE SETPOINT CONDITIONING
Bit 12 Error in the control block, DIFFERENTIAL CURRENT CONTROLLER
Bit 13 Error in the control block, FREQUENCY GENERATOR
Bit 14 Not assigned
Bit 15 Not assigned

Control word from the Profibus interface at the drive converter

V23 input value = 9

V24 actual value = control word from the PROFIBUS interface at the drive converter

Bit 0 ON/OFF1 1 (a log. 1 ≙ ON command)
Bit 1 OFF2 (a log. 0 ≙ OFF2 command)
Bit 2 OFF3 (a log. 0 ≙ OFF3 command)
Bit 3 Inverter enable (a log. 1 ≙ inverter enable)
Bit 4 Ramp-function generator enable (a log. 1 ≙ RFG enable)
Bit 5 Ramp-function generator hold (a log. 0 ≙ RFG hold)
Bit 6 Setpoint enable (a log. 1 ≙ SW enable)
Bit 7 Acknowledge (a log. 1 ≙ acknowledge command; 1 sec pulse)
Bit 8 Inching (a log. 1 ≙ inching command)
Bit 9 Control from the automation system (a log. 1 ≙ control from the automation system)
Bit 10 Not assigned
Bit 11 Clockwise rotating field selection (a log. 1 ≙ CRF)
Bit 12 Counter-clockwise rotating field selection (a log. 1 ≙ CCRF)
Bit 13 Motorized potentiometer, raise (a log. 1 ≙ command, raise motorized potentiometer)
Bit 14 Motorized potentiometer, lower (a log. 1 ≙ command lower motorized potentiometer)
Bit 15 External fault (a log. 1 ≙ fault)

Control word 2 of the Profibus interface to the drive converter

V23 input value = 10

V24 actual value = control word 2 of the Profibus interface to the drive converter

Bit 0 Checkback signal, transformer ready (a log. 1 ≙ ready)
Bit 1 Checkback signal, transformer alarm (a log. 1 ≙ alarm)
Bit 2 Checkback signal, transformer fault (a log. 1 ≙ fault)
Bit 3 Checkback signal, motor ready (a log. 1 ≙ ready)
Bit 4 Checkback signal, motor alarm (a log. 1 ≙ alarm)
Bit 5 Checkback signal, motor fault (a log. ≙ fault)
Bit 6 Checkback signal, cooling unit ready (a log. 1 ≙ ready)
Bit 7 Checkback signal, cooling unit alarm (a log. 1 ≙ alarm)
Bit 8 Checkback signal, cooling unit fault (a log. ≙ fault)
Bit 9 External alarm (a log. 1 ≙ alarm)
Bit 10 Checkback signal, circuit-breaker OPEN (a log. 1 ≙ circuit-breaker is OPEN)
Bit 11 Safety circuit violated (a log.1 ≙ safety shutdown)
Bit 12 Select, fixed setpoint bit 1 (a log. 1 ≙ selection)
Bit 13 Select, fixed setpoint bit 2 (a log 1 ≙ selection)
Bit 14 Speed/torque control selection (a log 1 ≙ speed control)
Bit 15 Still not assigned

Binary inputs of IT41; inputs 1 to 16

V23 input value = 11

V24 actual value = IT41 binary inputs; inputs 1 to 16

Bit 0 Command, drive converter ON; BE1; X100:33A; X100:33B
Bit 1 Command, OFF1; BE2; X100:34A; X100:34B
Bit 2 Command, OFF2: BE3; X100:35A; X100:35B
Bit 3 Command, inverter enable; BE4; X100:36A; X100:36B
Bit 4 Command, RFG enable; BE5; X100:37A; X100:37B
Bit 5 Command, RFG hold; BE6; X100:38A; X100:38B
Bit 6 Command, setpoint enable; BE7; X100:39A; X100:39B
Bit 7 Command, acknowledge; BE8; X100:40A; X100:40B
Bit 8 Parameterizable input; BE9; X100:41A
Bit 9 Parameterizable input; BE10; X100:42A; X100:42B
Bit 10 Parameterizable input; BE11; X100:43A; X100:43B
Bit 11 Parameterizable input; BE12; X100:44A; X100:44B
Bit 12 Checkback signal auxiliaries ON; BE13; X100:45A; X100:45B
Bit 13 Command, basic/standby changeover (key-actuated switch "Remote"/"Local"; BE14; A122.X2:6; A122.X2:56
Bit 14 Command, OFF1 from the door-mounted pushbutton; BE15; A122.X2:7; A122.X2:57
Bit 15 Command, ON from the door-mounted pushbutton; BE16; A122.X2:8; A122.X2:58

Bin[illegible]utputs of IT4[illegible]puts 1 t[illegible]

V23 input [illegible] = 12

V24 act[illegible]e = IT4[illegible]y output[illegible]uts 1 to 16

Bit 0 [illegible]ter is RE[illegible]O POWE[illegible]BA1; X100:48A[illegible]0:48B

Bit 1 Drive converter is R[illegible]; BA2; X100[illegible]X100:49B

Bit 2 Drive converter is [illegible]ERATION; BA[illegible]00:50A; X100:5[illegible]

Bit 3 Drive converte[illegible]fault; BA4; X10[illegible]X100:51B

Bit 4 Drive conver[illegible] an alarm; BA5; X1[illegible]A; X100:52B

Bit 5 Setpoint/a[illegible]alue deviation outside[illegible]erance band; BA6; X1[illegible], X100:53B

Bit 6 CLOS[illegible]nanc12(-122(m)-24(AD)-nA)[illegible]710(100:)-13(50[illegible]

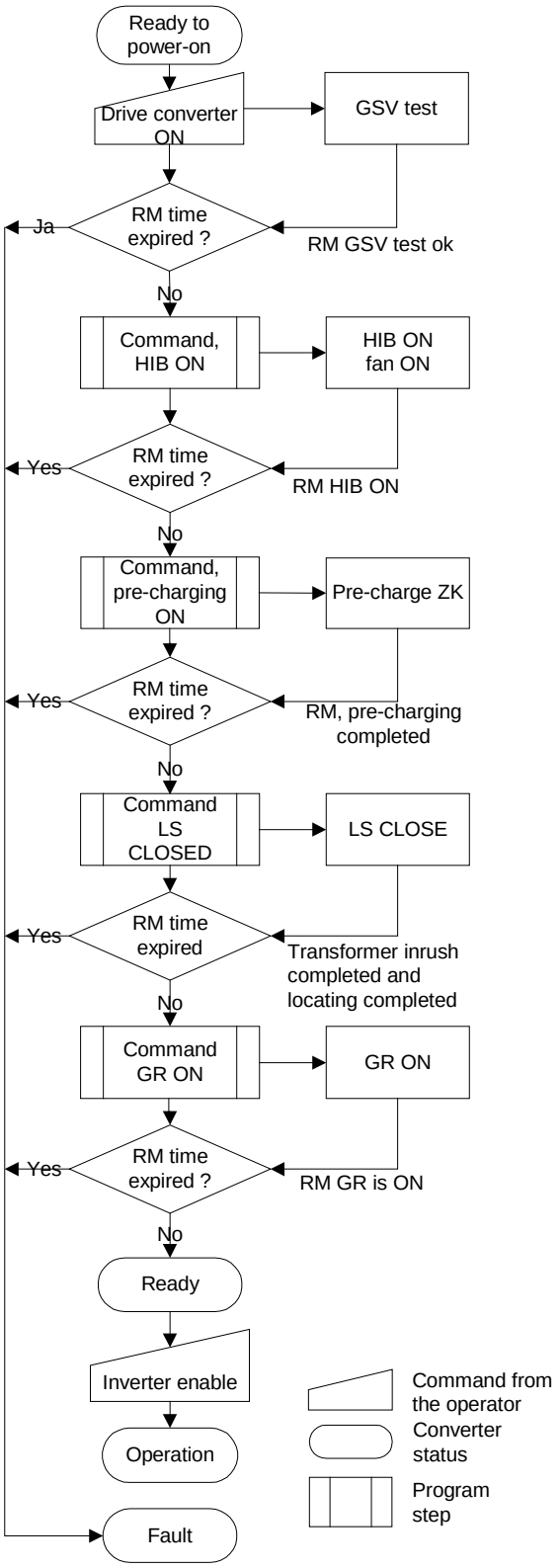

Fig. 5.2 Sequence diagram, power-on

5.3.2 Power-off sequence

A power-off sequence can be initiated in various ways

- Pressing the OFF button on the drive converter (if this is enabled in the FP IO): Sequence corresponding to OFF1
- OFF1 from the remote control (terminal strip or PROFIBUS DP): The drive is shut down
- OFF2 from the remote control (terminal strip or PROFIBUS DP): Inverter inhibit, motor coasts down
- OFF3 from the remote control (terminal strip or PROFIBUS DP): The drive is shut down with another ramp
- Fault trip

  A fault trip can be initiated in various ways:

  - when internal monitoring functions and protective devices respond.
  - the safety circuit is interrupted, e.g. by opening the doors of the power section or by pressing the mushroom head pushbutton in the door
  - external fault signaled via the remote control (terminal strip or PROFIBUS DP).

  The faults can be assigned a fault class with the appropriate parameterization.

  Fault class 1: Significant faults; the circuit-breaker is opened as quickly as possible and the DC link discharged. The drive converter goes into the FAULT condition

  Fault class 2: Fault; the drive is shutdown as for OFF1. The drive converter goes into the FAULT condition

The circuit-breaker is opened after the drive is shut down and the inverter inhibited. When the circuit-breaker is opened, the white signal lamp goes dark and the green signal lamp goes bright.

Warning

The DC link can still be live (under voltage) even after the circuit-breaker is opened and the green signal lamp is bright.

The DC link discharges itself.

For a fault trip, the DC link is discharged as quickly as possible via the integrated discharge circuit (crowbar thyristor).

The sequences for the various power-off procedures are described in more detail in the following sequence diagrams.

Note

For SIMOVERT MV drive converters with **diode rectifier**, the energy can only be fed from the line supply to the drive. Regenerative feedback is not possible. The drive can only draw as much power, as the drive converter takes as power loss. The ramp-function generator down ramps must be set so that the drive converter does not go into a fault condition with DC link overvoltage.

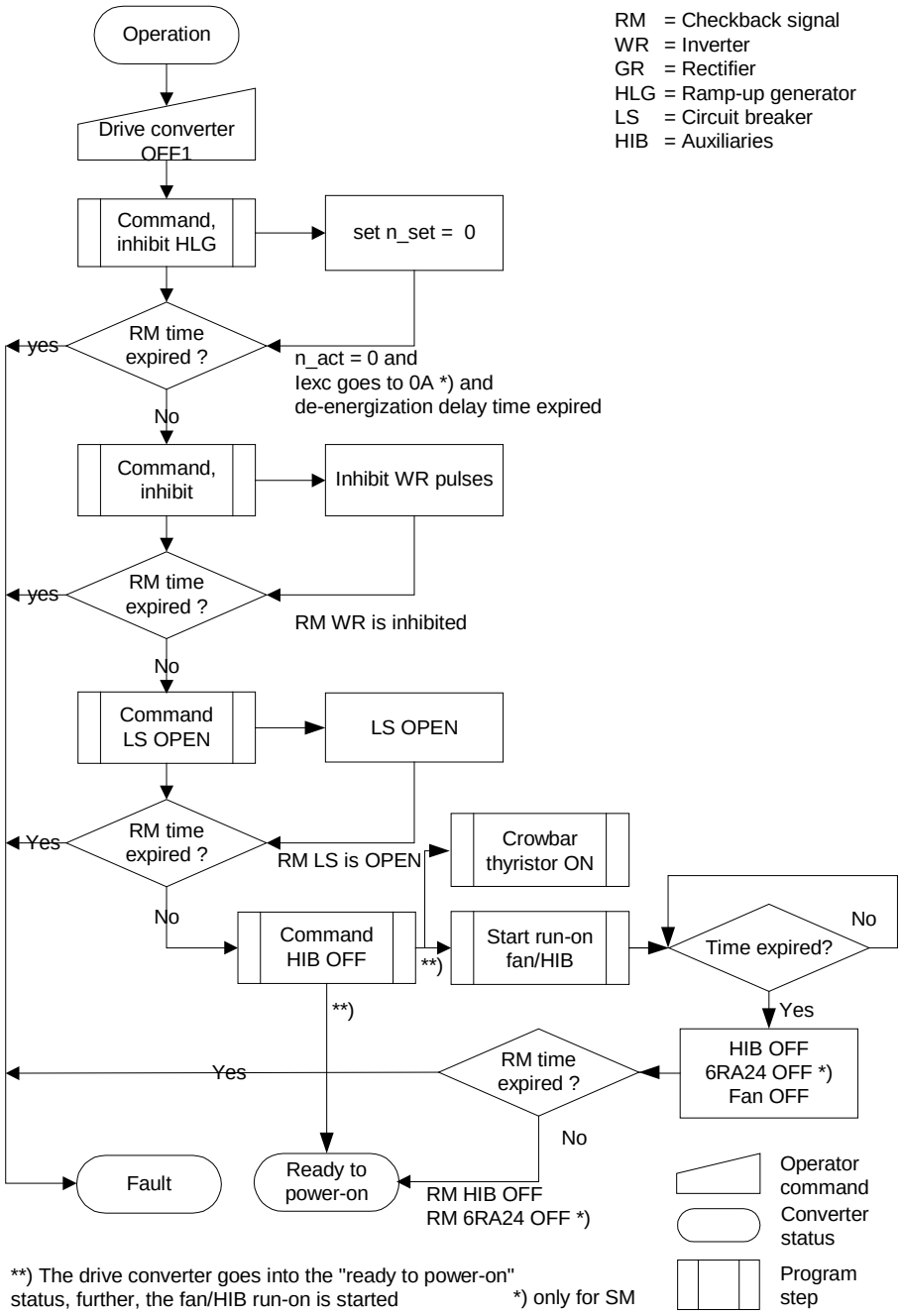

Fig. 5.3 Sequence diagram, OFF1

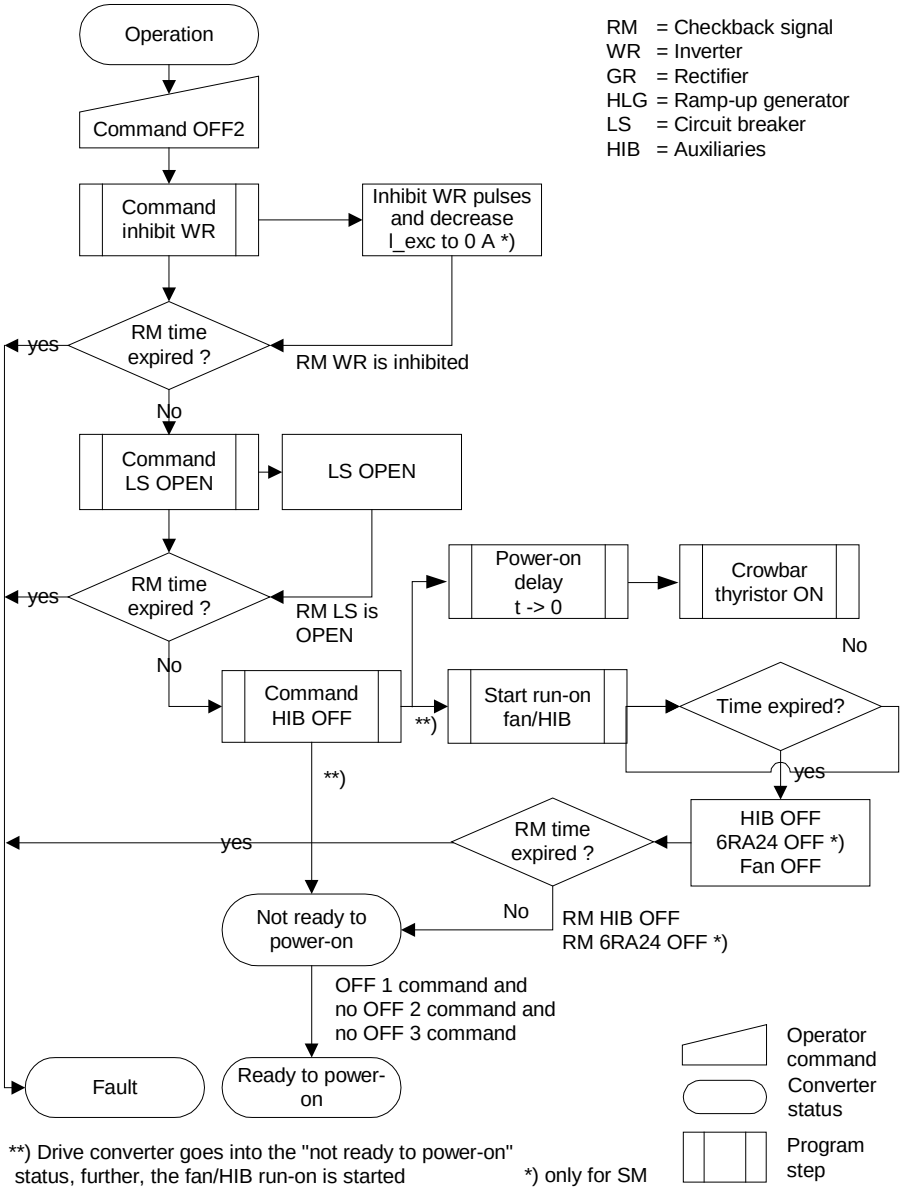

Fig. 5.4 Sequence diagram, OFF2

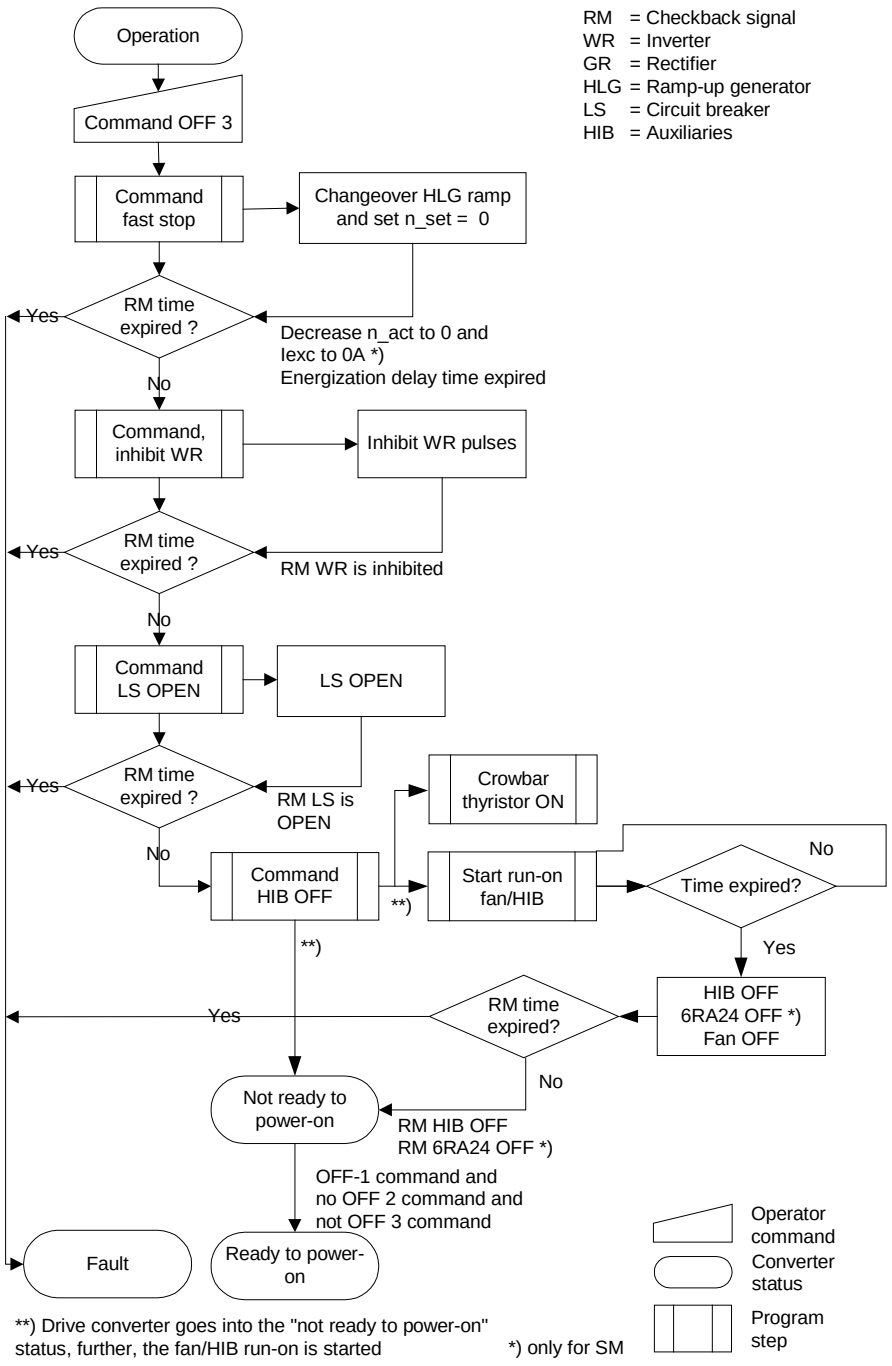

Fig. 5.5 Sequence diagram, OFF3

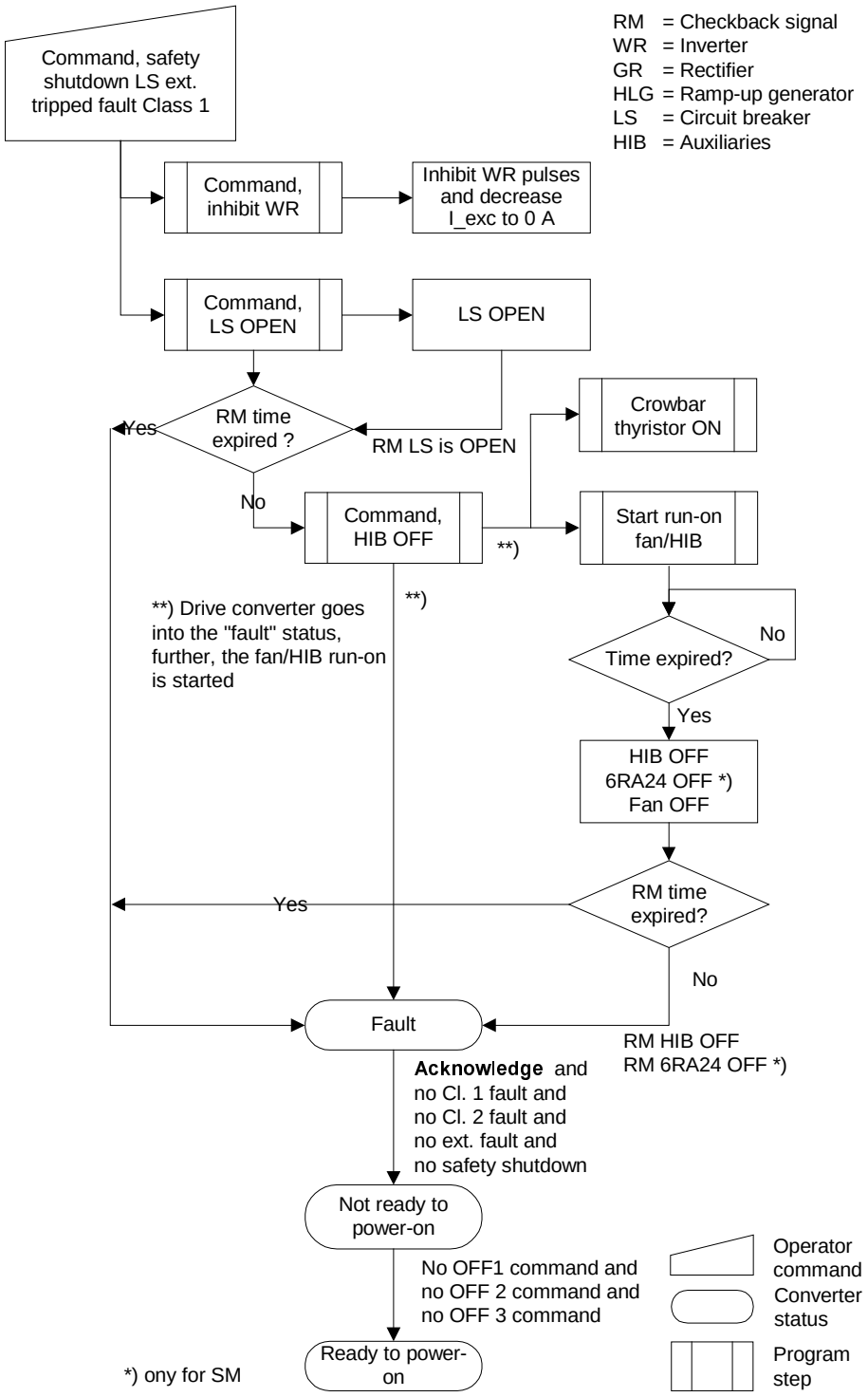

Fig. 5.6 Sequence diagram OFF, Class 1 fault

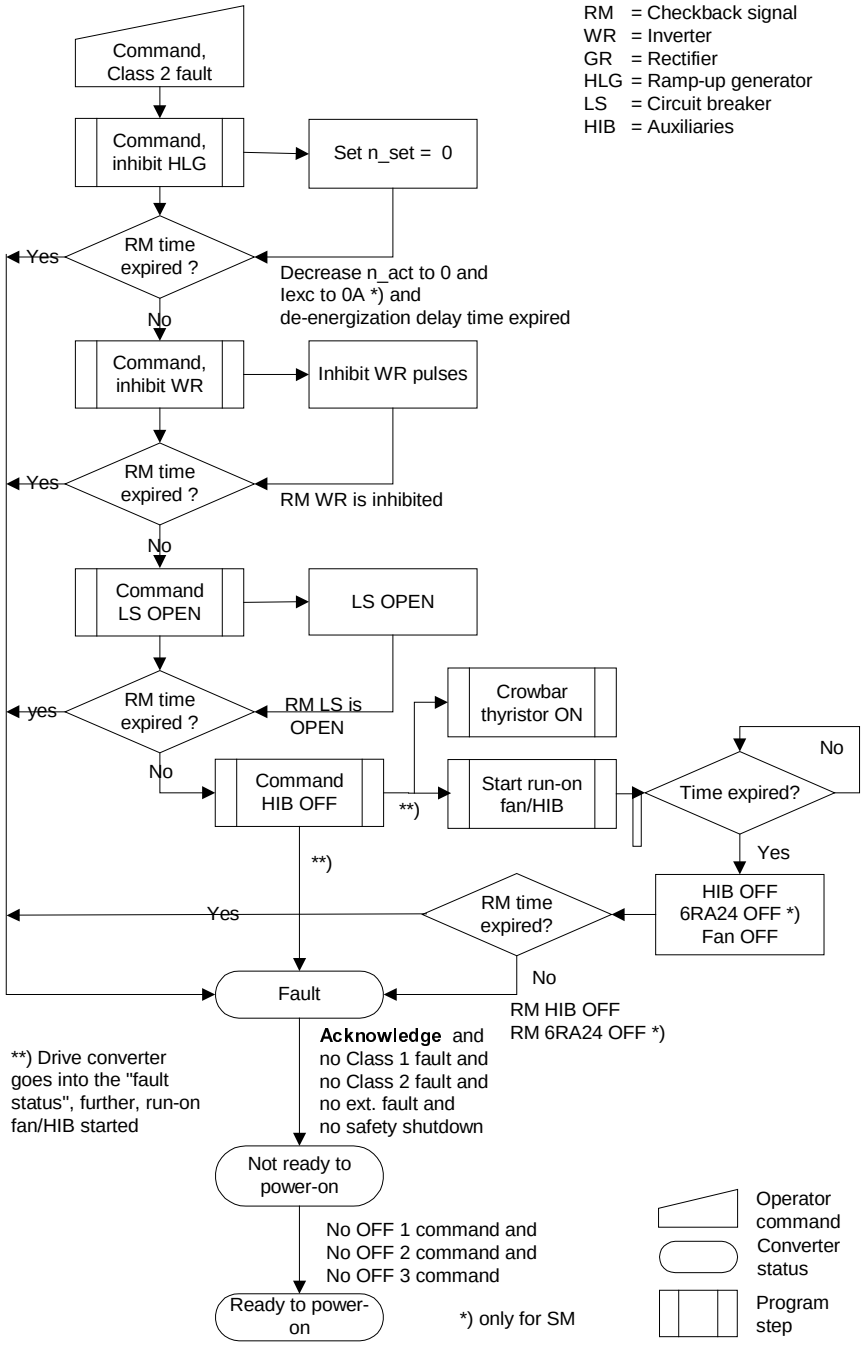

Fig. 5.7 Sequence diagram OFF, Class 2 fault

The following editions have been published so far:

Edition	Internal Item Number
02.00	436 126.9813.76 JM AA - 76

Edition 02.00 consists of the following chapters:

Chapter		Changes	Version date
1	Transport, storage and installation	First edition	02.00
2	Connecting-up	First edition	02.00
3	Selected functions	First edition	02.00
4	Start-up	First edition	02.00
5	Operation	First edition	02.00

Siemens AG
Group: Automation and Drives (A&D)
Division: Large Drives (LD)
Postfach 3269, D-91050 Erlangen

© Siemens AG, 2000
Subject to change without prior notice

Siemens Aktiengesellschaft

Order No.: 6SE8004-0BH76
Printed in the Federal Republic of Germany
02.00

Excellence in Automation & Drives: Siemens